Western Electric

308B Vacuum Tube

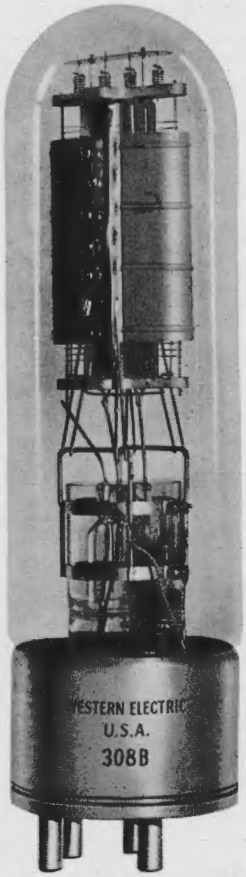

Classification—Filamentary air-cooled triode

This tube was designed primarily for use as an audio-frequency amplifier or modulator; or as a radio-frequency oscillator or amplifier.

Dimensions—Dimensions and outline diagrams are shown in Figures 1 and 2 and are:

Maximum overall length	13⅝″
Maximum diameter	3⅝″

Copyright 1936 Western Electric Company, Incorporated

Mounting—Large four-pin bayonet base for use in a W. E. 113A or similar socket, for either vertical or horizontal mounting. If mounted horizontally the plane of the filament, which is indicated in Figure 2, should be vertical.

Filament—Thoriated tungsten.

Filament voltage	14 volts
Nominal filament current	6 amperes
Average thermionic emission	4 amperes

Approximate Direct Interelectrode Capacitances

Plate to grid	17.4 $\mu\mu$f.
Grid to filament	13.6 $\mu\mu$f.
Plate to filament	9.3 $\mu\mu$f.

Characteristics—Performance data given below are based upon a typical set of conditions. Variations can be expected with different circuits and tubes.

Figures 3 and 4 give the static characteristics of a typical tube plotted against grid and plate voltages.

Average Characteristics at 1500 volts direct plate potential and minus 150 volts grid bias, I_b = .167 ampere.

Amplification factor	8
Plate resistance	1070 ohms
Grid to plate tranconductance	7500 micromhos

Operation

Maximum Ratings

Max. direct plate voltage	2250 volts
Max. direct plate current	325 milliamperes
Max. plate dissipation	250 watts
Max. direct grid current	75 milliamperes
Max. r-f grid current	5 amperes
Max. frequency for the above ratings	1.5 megacycles
Max. plate voltage for upper frequency limit of 4.5 Mc	750 volts

Max. plate voltage for frequencies between 1.5 and 4.5 Mc in proportion.

The above are maximum ratings which do not apply simultaneously but depend on the type of service as specified below.

Class A Audio Amplifier or Modulator

Direct plate voltage	1500	1000 volts
Grid bias	−155	−80 volts
Direct plate current	135	210 milliamperes
Plate dissipation	200	210 watts
Load impedance	13000	3000 ohms
Undistorted output	50	35 watts

Class B Audio Amplifier or Modulator—for Balanced 2 Tube Circuit

Direct plate voltage	1750	1500 volts
Grid bias	−215	−180 volts
Direct plate current per tube		
No drive	30	25 milliamperes
Max. drive	300	300 milliamperes
Plate dissipation	240	210 watts
Load resistance plate-to-plate	5200	4280 ohms
Load resistance per tube	1300	1070 ohms
Approximate maximum output	575	475 watts
Recommended power for driving stage	35	35 watts

Class B Radio-Frequency Amplifier

Direct plate voltage	1750	1500 volts
Direct plate current	215	250 milliamperes
Plate dissipation	250	250 watts
Grid bias	−230	−200 volts
Approx. carrier watts for use with 100% modulation	125	125 watts

Class C Radio-Frequency Oscillator or Power Amplifier—Unmodulated

Direct plate voltage	1750	1500 volts
Direct plate current	300	300 milliamperes
Grid bias	−345 to −460	−300 to −400 volts
Nominal power output	350	300 watts

Class C Radio-Frequency Amplifier—Plate Modulated

Direct plate voltage	1250	1000 volts
Direct plate current	300	300 milliamperes
Grid bias	−320	−260 volts
Max. direct grid current	75	75 milliamperes
Nominal carrier power output for use with 100% modulation	250	200 watts

Operating Precautions

Mechanical—Figures 1 and 2 show the overall dimensions and basing arrangement for the tube.

The tubes should not be subjected to mechanical shock or excessive vibration. Mechanical vibration may cause breakage of the thoriated tungsten filaments.

A free circulation of air must be provided to insure adequate cooling of the glass during operation.

Electrical—Overload protection should always be provided for the plate circuit. A suitable fuse or circuit breaker should remove the plate voltage if the plate current exceeds 425 milliamperes. Although the tube is sufficiently rugged to withstand momentary overloads, a prolonged overload caused by inefficient adjustment of the circuit, may damage the tube. When adjusting a new circuit, reduced plate voltage or a series resistance of 1000 to 5000 ohms in the plate circuit should be used until it is operating properly.

The filament should always be operated at the rated voltage, measured at the tube terminals. A 5% decrease in filament voltage reduces the thermionic emission approximately 25%. Either direct or alternating current may be used for heating the filament. If direct current is used, the plate and grid circuit returns should be connected to the negative filament terminal. If alternating current is used, the circuit returns should be connected to the center tap of the filament heating transformer winding or to the center tap of a resistor placed between the filament terminals. A resistance of 30 to 40 ohms of ten watt rating is suitable.

In cases where severe and prolonged overload has temporarily impaired the electronic emission of the filament, the activity may be restored by operating the filament, with the plate and grid voltages off, 30% above normal voltage for 10 minutes followed by a longer period at normal voltage.

Audio Amplifier or Modulator

Class A—Peak grid drive equal to or less than the grid bias.

Grid bias may be obtained from the drop across a resistance in the plate current return or from a battery or rectifier supply.

Plate dissipation allowable for this type of service is generally lower than is safe for other uses since the energy is dissipated in the plate in smaller areas due to relatively high voltage drop in the tube.

The plate dissipation is equal to the plate voltage multiplied by the normal plate current. Performance data are based upon the use of a resistance load. Undistorted output is calculated on the basis of 5% second harmonic distortion.

Class B—Grid bias practically at cut-off and grid driving voltage higher than the bias.

Two tubes may be used in a balanced circuit. An adequate driving stage and an input transformer with good regulation must be used so that the grid current drawn during positive grid swings does not produce appreciable distortion. The output transformer must transform the load impedance to the proper value for the tubes used. The power output obtainable will be determined by the quality of the transformer used and the amount of distortion which can be tolerated. The grid bias must be held constant and therefore cannot be obtained by grid leak or series resistor methods. A battery or other source having good regulation is necessary.

The power required of a modulator for complete modulation of a Class C amplifier is one-half the direct power input to the plates of the Class C amplifier.

Radio-Frequency Oscillator or Power Amplifier

Class B—Radio-Frequency Amplifier.

The Class B radio-frequency amplifier is used to amplify a modulated radio-frequency carrier wave without appreciable distortion. It operates similarly to the Class B audio amplifier except that a single tube may be used, the tuned output circuit serving to preserve the wave shape. The push-pull circuit, however, eliminates the even order harmonics and thus increases the efficiency slightly.

Class C—Grid bias below cutoff.

Unmodulated

This type of operation is suitable for telegraphy, or the production of a continuous flow of radio-frequency power for purposes other than communication.

Plate Modulated

This type of operation is for use when the modulating voltage is superimposed on the plate supply voltage and to obtain good quality the output power should vary as the square of the plate voltage. For complete or 100% modulation, the plate voltage varies from zero to twice the applied direct value during a cycle of the audio frequency. With no modulation applied, the plate voltage is, of course, the direct value and the carrier power output is one-fourth of the peak power output under 100% modulation. In this case, since the plate voltage varies with modulation, the direct value must be rated lower than for other types of operation.

High Frequency Ratings

The frequency limits specified under maximum ratings are based on the tube being used as an oscillator. The tube may be used at full rating up to 1.5 megacycles. When operating at higher frequencies, the dielectric losses, charging currents and lead-in heating are increased greatly. The plate voltage and hence plate dissipation must be reduced to values specified for the upper frequency limit and for frequencies between these two limits the plate voltage should be proportionately reduced.

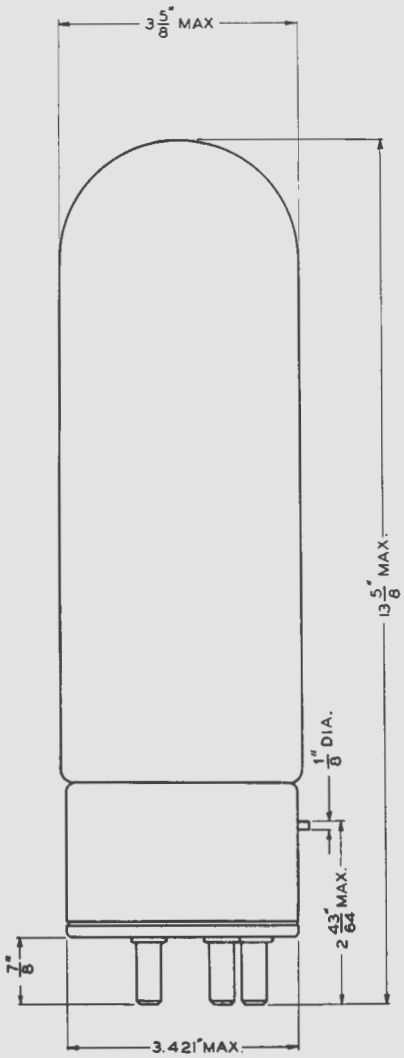

FIG. 1

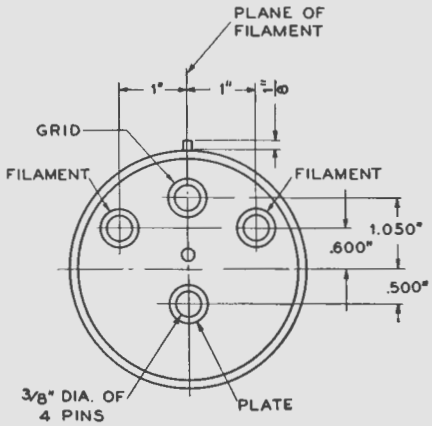

FIG. 2

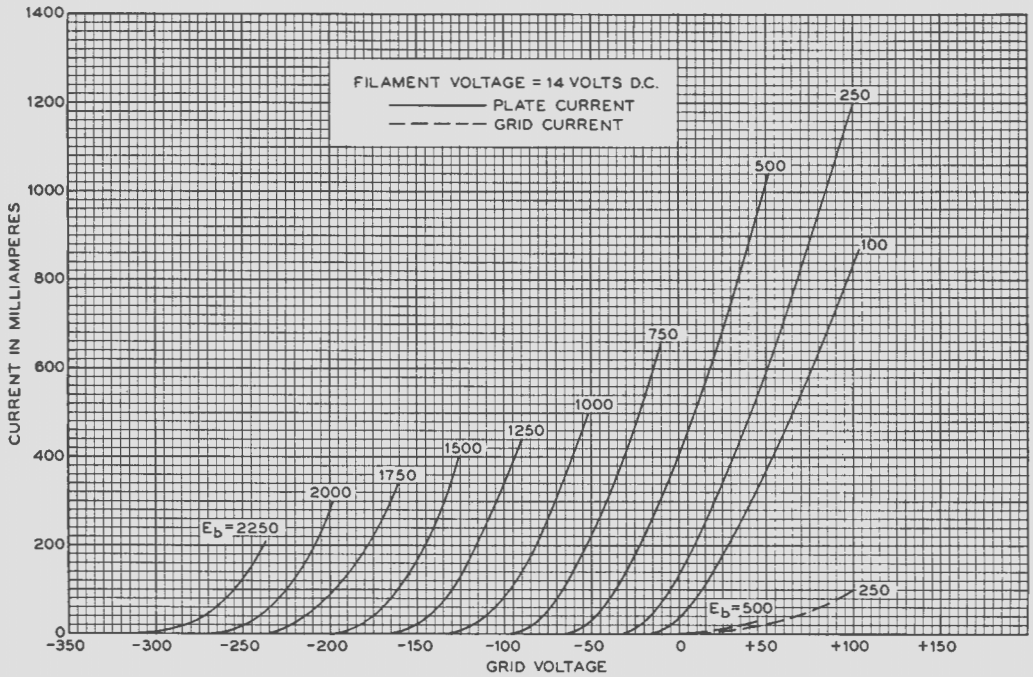
FILAMENT VOLTAGE = 14 VOLTS D.C.
PLATE CURRENT
GRID CURRENT
CURRENT IN MILLIAMPERES
GRID VOLTAGE
E_b=2250
2000
1750
1500
1250
1000
750
500
250
100
E_b=500
250

FIG. 3

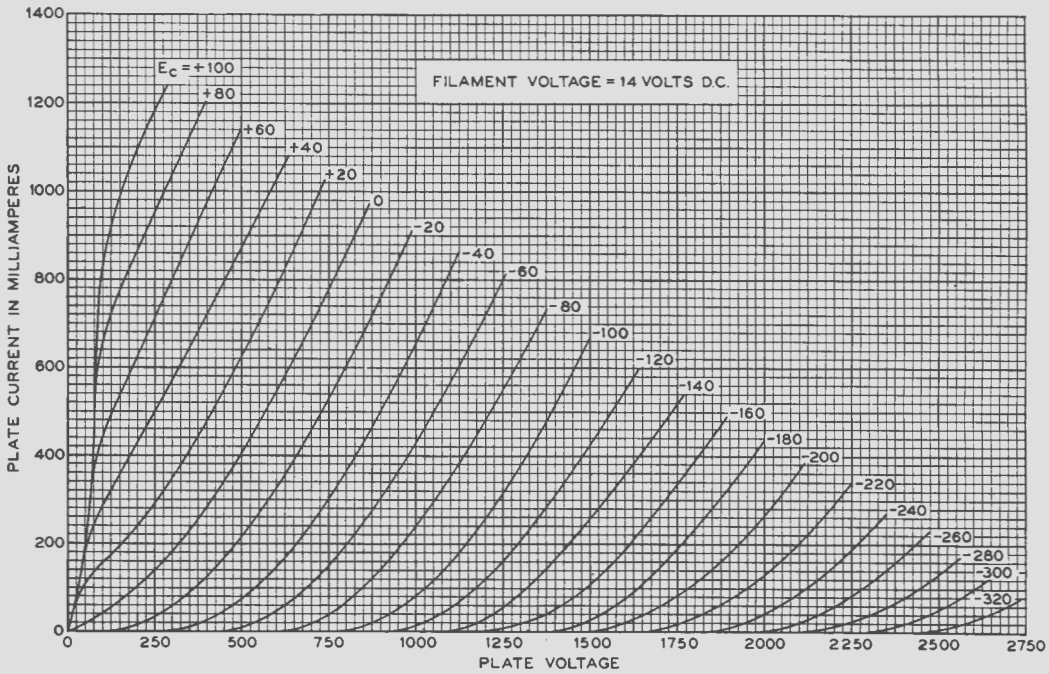
FILAMENT VOLTAGE = 14 VOLTS D.C.
PLATE CURRENT IN MILLIAMPERES
PLATE VOLTAGE
E_c = +100
+80
+60
+40
+20
0
-20
-40
-60
-80
-100
-120
-140
-160
-180
-200
-220
-240
-260
-280
-300
-320

FIG. 4