Western Electric

269A Vacuum Tube

Classification—Three element, argon filled, grid-controlled rectifier with a filamentary cathode

It is primarily a rectifier of low internal impedance whose conduction cycle is determined by the relative instantaneous control-electrode and anode potentials. It is intended for use in special circuits as a relay or trigger-action device. A few of its other possible uses are: as a controlled-frequency oscillator giving a square wave-form, as a voltmeter or volume level-indicator, or as a source of sweep-voltage for a linear time axis.

Dimensions—The dimensions and outline diagrams are given in Figures 1 and 2. The overall dimensions are:

Maximum length	4 9/16″
Diameter	2 3/8″

Mounting—The 269A vacuum tube employs a standard four-pin thrust type base suitable for use in a Western Electric 143B or similar socket. The arrangement of electrode connections to the base terminals is shown in Figure 2.

It may be mounted in either a vertical or horizontal position, although the vertical position is preferable. If mounted in a horizontal position the plane of the filament, as shown in Figure 2 should be vertical.

Copyright 1936 Western Electric Company, Incorporated

Filament Rating

Filament voltage	2.2 volts
Nominal filament current	0.55 ampere

The filament of this tube is designed to operate on a voltage basis. The voltage should be maintained to within 5% of its rated value (2.2 volts). Operation of the filament above the upper limit will definitely reduce the life of the tube, while a decrease below the lower limit may cause immediate failure.

Sufficient time should always be allowed for the cathode temperature to reach its normal operating value before space current is drawn. If filament transformers with good regulation are used this time is 2 seconds. Failure to allow sufficient time may result in immediate failure. If the anode voltage is less than 50 volts space current may be drawn simultaneously with the application of filament voltage; but approximately 2 seconds will be required for the space current to reach its final value.

Operating Conditions

Anode-cathode potential drop	16—24 volts
Maximum instantaneous space current (sine wave)	20 milliamperes
Maximum instantaneous space current (condenser discharge)	200 milliamperes
Maximum instantaneous potential between anode and control-electrode	275 volts

The characteristics of the 269A tube are such that, for any given anode potential, there is a critical control-electrode potential. If the control-electrode is held more negative than this value and the tube is non-conducting, the space current will remain zero. If it is made less negative, the space current assumes a value determined by the applied anode potential and the resistance in the anode circuit. To extinguish the discharge and return the space current to zero, the positive anode potential must be removed. When space current is flowing, a visible discharge occurs in the tube. Under this condition, the anode-cathode potential is practically independent of the value of both the space current and the control-electrode potential. A protective resistance should always be included in the anode circuit to limit the maximum instantaneous space current to the rated values. A typical curve relating the critical control-electrode potential to the anode potential is shown in Figure 3. This characteristic may vary from tube to tube and during the life of a given tube.

Sufficient resistance must always be included in the grid circuit to limit the negative grid potential to 10 volts when space current is flowing. Failure to observe this precaution will result in short tube life.

Typical Circuits

The tube may be used in a variety of circuits adapted to the application of gas-filled tubes. Two general types are common. One use of the tube is to produce a saw-toothed, current wave. The circuit for this application is shown in Figure 4. The resistance R should, ordinarily, be at least 100,000 ohms, and the product RC (C in farads) approximately equal to the desired fundamental period.

The second general use for the tube is as a relay device. In this application the anode may be supplied from either alternating or direct current. When supplied from direct current, the circuit, Figure 5, possesses a "lock-in" feature, since the anode potential must be removed momentarily in order to restore the tube to the non-conducting condition. When supplied from alternating current, the circuit possesses no "lock-in" feature, but the average anode current may be controlled by the relative phase of control-electrode and anode potentials. The schematic circuit for this application is shown in Figure 6. Figure 7 is a simplified circuit employing a photoelectric cell in place of the resistance, R, used in the phase shifting device in Figure 6. The photoelectric cell, however, is equivalent to a variable resistance in the sense that the current passed will depend upon the amount of light falling on it. In circuits Figures 6 and 7 alternating current may be used for the filament supply.

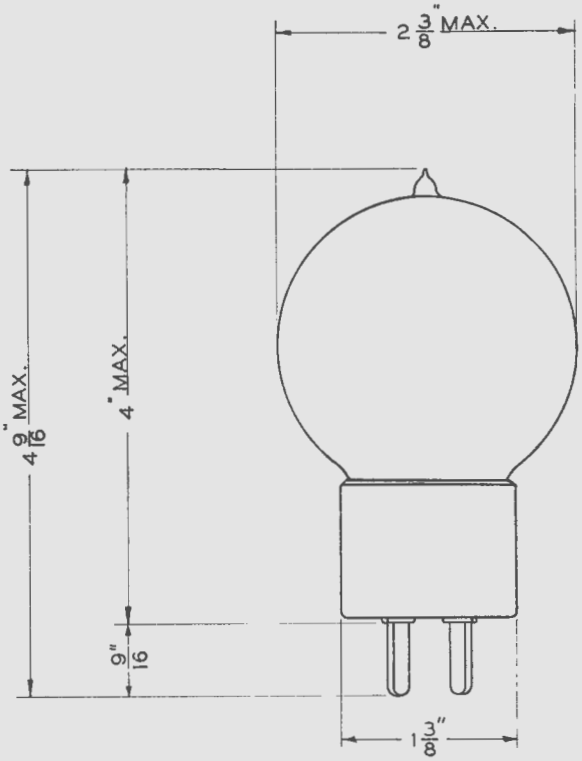

FIG. 1

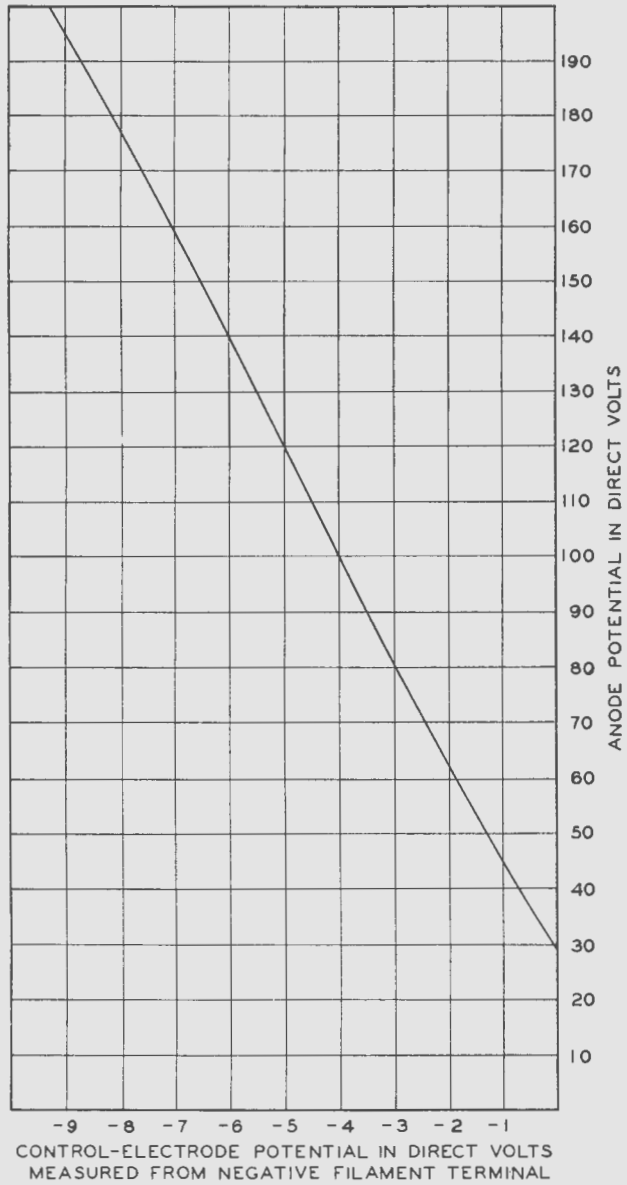

FIG. 3

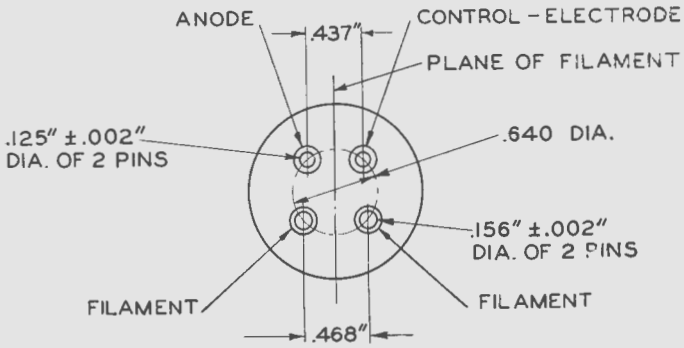

FIG. 2

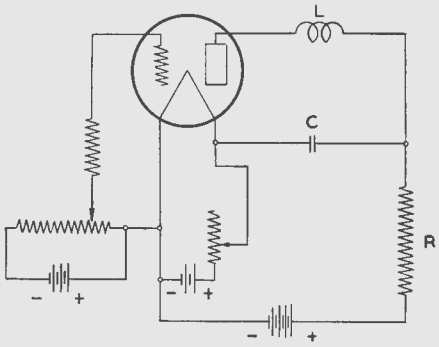

FIG. 4

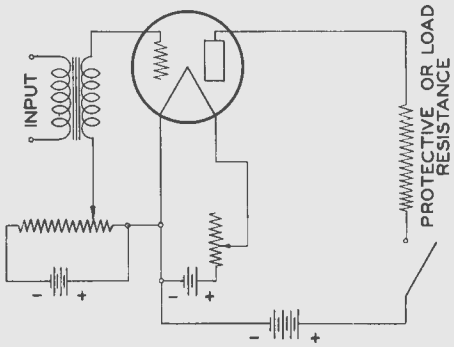

FIG. 5

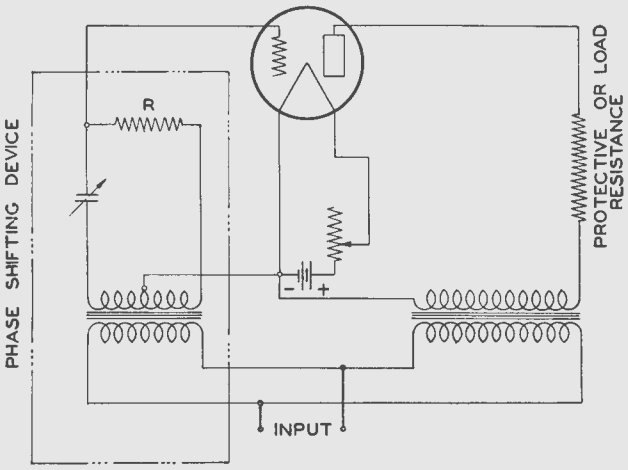

FIG. 6

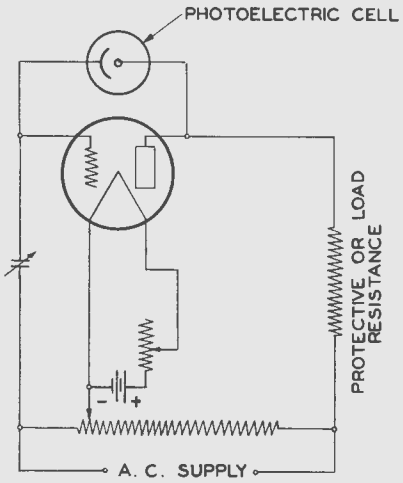

FIG. 7

1-C-36-53C
PRINTED IN U.S.A.

A development of Bell Telephone Laboratories, Incorporated, the research laboratories of the American Telephone and Telegraph Company, and the Western Electric Company

V. T. DATA SHEET 269A
ISSUE 1