Western Electric

345A and 351A Vacuum Tubes

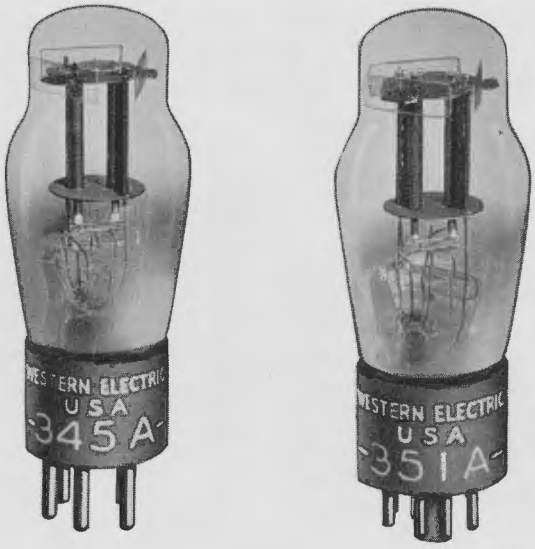

Classification—Full-wave, thermionic high vacuum rectifiers

These tubes are designed to supply direct current up to 100 milliamperes from an alternating current source. The tubes are used as full-wave rectifiers to supply direct current from A.C. power lines or to rectify radio-frequency currents for feedback purposes in broadcast transmitters.

Each tube consists of two diode units with the two heaters connected in parallel and the two cathodes connected together inside the tube. The 345A and 351A tubes are identical except for the bases.

Dimensions and Connections—The outline diagrams of the tube and base giving dimensions and the arrangement of electrode connections to the base terminals for the 345A tube are shown in Figures 1 and 2. Similar information for the 351A is shown in Figures 3 and 4.

Mounting—The 345A vacuum tube employs a small five pin thrust type base suitable for use in a Western Electric 141A or similar socket.

The 351A vacuum tube employs a small shell six pin octal base.

The tubes may be mounted in any position.

Heater Rating

Heater voltage	6.3 volts
Nominal heater current	1.0 ampere

Copyright, 1939, Western Electric Company, Incorporated

The heater is designed to operate on a voltage basis and should be operated at as near the rated voltage as practicable.

Cathode Connection—Preferably direct to the heater. In applications where it is necessary to apply a voltage between cathode and heater it should not exceed 500 volts.

Characteristics—Figure 5 shows the plate current-plate voltage characteristic of a single diode unit of a typical tube.

The rectified voltage and current output characteristics for various values of applied alternating voltages are shown in Figures 6 and 7. In Figure 6 the characteristics are for a choke-input filter as shown in circuit A and those of Figure 7 are for a condenser-input filter as shown in circuit B.

Operating Conditions

	R-M-S Alternating Voltage Per Plate	Total Rectified Current
	Volts	Milliamperes
Choke-Input Filter	300	100
	350	100
	*400	100
Condenser-Input Filter	300	100
	*350	**100

*Maximum operating conditions
**4MF maximum filter input capacitance

A less severe condition should be selected in preference to a maximum operating condition wherever possible. The life of a tube at maximum conditions may be shorter than at less severe conditions.

Effect of Filter

It is evident from the regulation characteristics of Figures 6 and 7 that for a given output current and voltage, the choke-input filter requires a somewhat higher alternating voltage applied to the plates of the tube than the condenser-input filter. With the condenser input filter, however, the cathode has to supply relatively large peaks of current during the charging period of the condenser. The peak current increases in value as the capacitance of the condenser is increased and may be much greater than the average rectified current, though its duration in such cases is only a short fraction of a cycle. Since the peak current in a choke-input filter is only slightly greater than the rectified currrent and this type filter gives better regulation than the condenser input circuit it is advisable to use it in preference to the condenser-input filter wherever possible. With a condenser input filter the capacitance of the input condenser should preferably not exceed 4 microfarads.

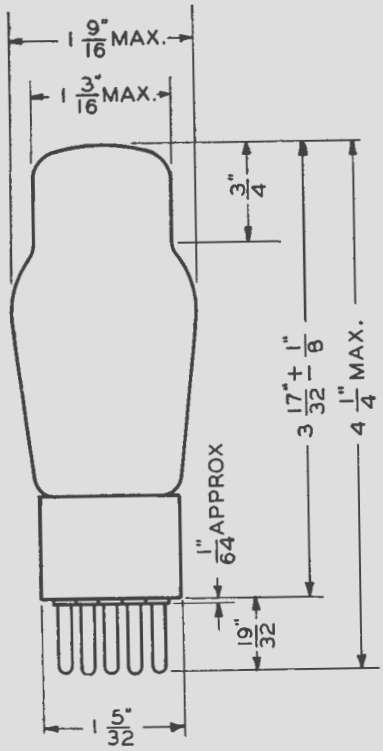

FIG. 1

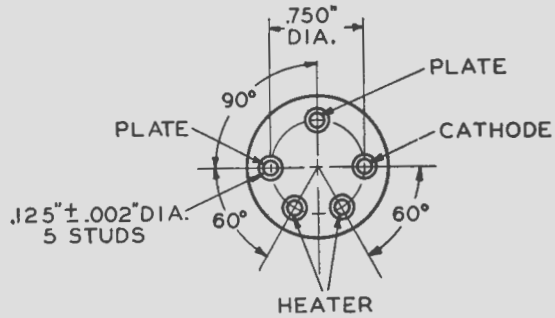

FIG. 2

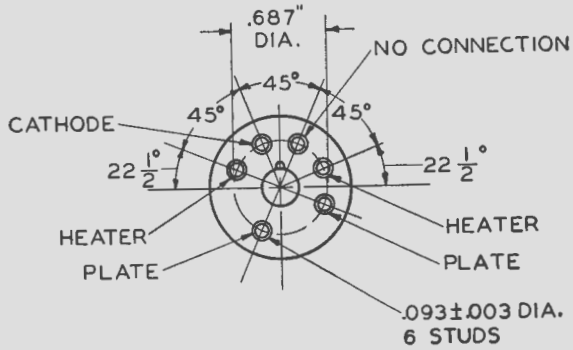

FIG. 4

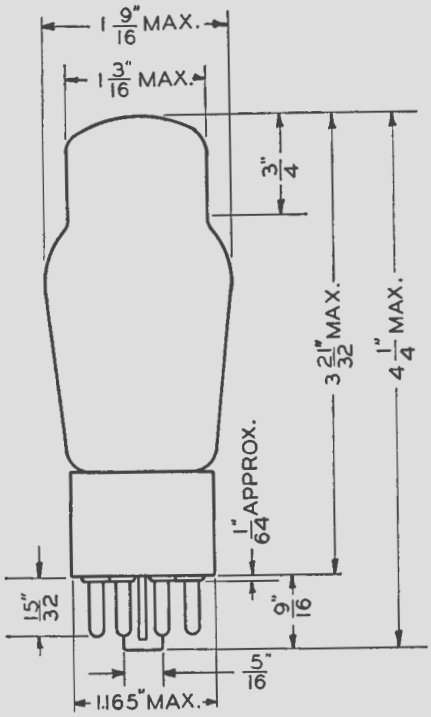

FIG. 3

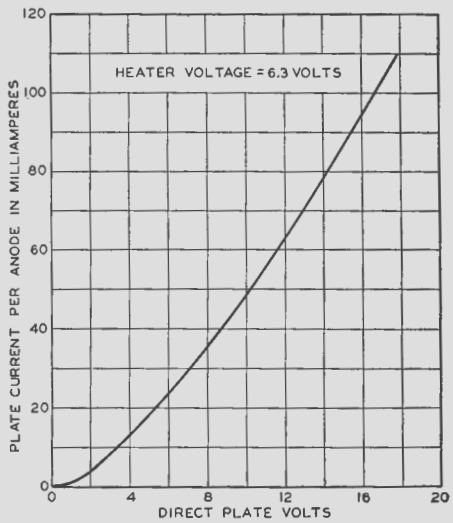

FIG. 5

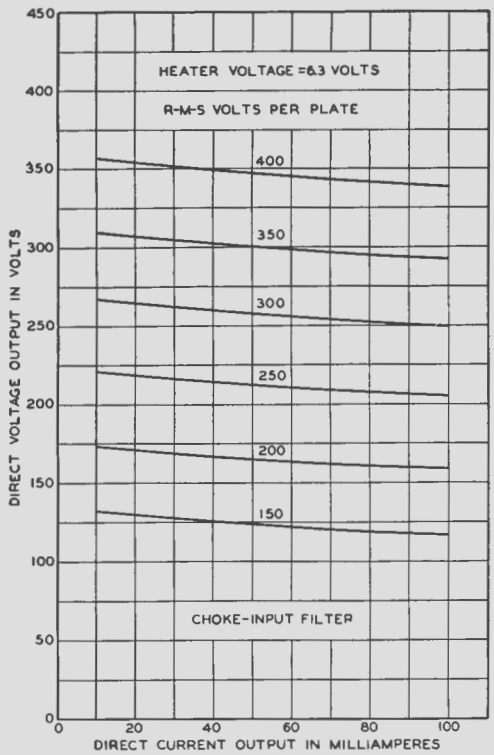

FIG. 6

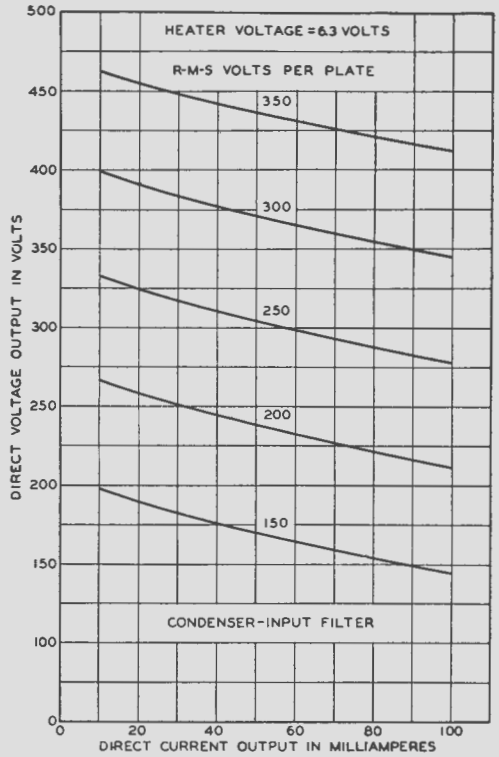

FIG. 7

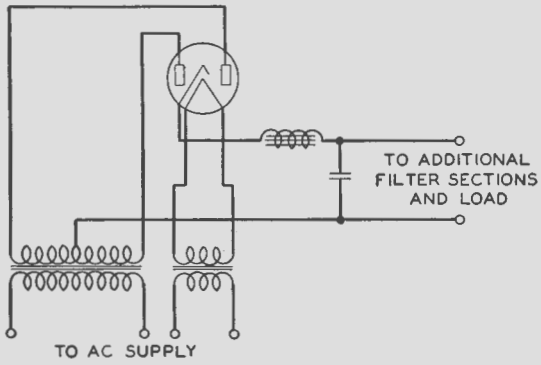

CHOKE INPUT FILTER
CIRCUIT A

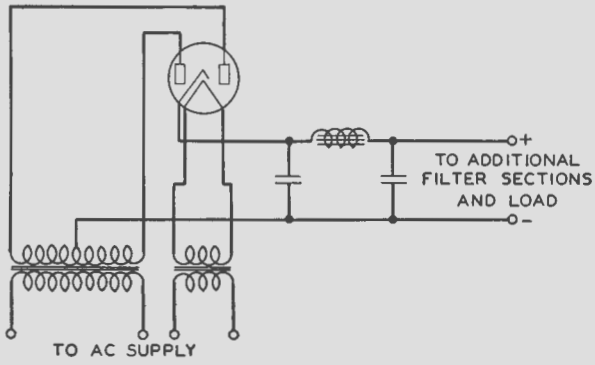

CONDENSER INPUT FILTER
CIRCUIT B