Western Electric

262B and 347A Vacuum Tubes

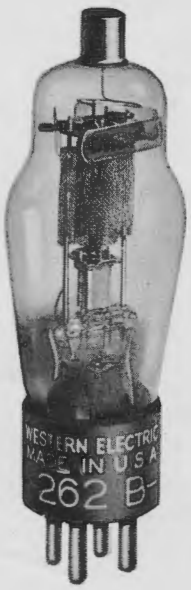

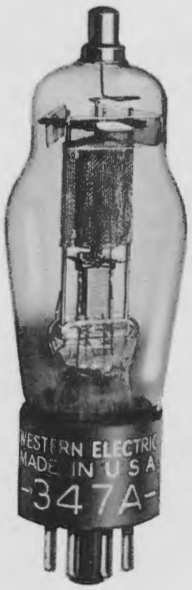

Classification—Low-power triodes with indirectly-heated cathodes

These tubes are intended for use in audio-frequency amplifiers where exceptionally low tube noise is required. They are designed to minimize hum produced by alternating current operation of the heater and to minimize microphonic noise.

The two types differ in heater rating, type of base and type of grid cap. In all other respects they are identical.

The 262B tube may be used as a replacement for the 262A tube in all applications where the voltage between heater and cathode is low.

Dimensions and Connections—Outline diagrams of the tube and base giving the dimensions and the arrangement of electrode connections to the base terminals for the 262B tube are shown in Figures 1 and 2. Similar information for the 347A tube is shown in Figures 3 and 4.

Base and Mounting—The 262B tube employs a small four-pin thrust type base suitable for use in a Western Electric 143B or similar socket. The base pins are silver-plated. The grid terminal is a small metal cap located at the top of the bulb.

The 347A tube employs a small shell octal five-pin base. The grid terminal is a skirted miniature metal cap located at the top of the bulb.

These tubes may be mounted in any position.

Copyright 1939, Western Electric Company, Incorporated

Average Direct Interelectrode Capacitances

Grid to plate	1.9 $\mu\mu$f.
Grid to cathode and heater	2.3 $\mu\mu$f.
Plate to cathode and heater	4.1 $\mu\mu$f.

Heater Ratings

	262B Tube	347A Tube
Heater voltage	10.0	6.3 volts, a.c. or d.c.
Nominal heater current	0.32	0.50 ampere

The heater elements of these tubes are designed to operate on a voltage basis and should be operated at as near the rated voltage as practicable.

Cathode Connection—Where alternating heater voltage is used the cathode should preferably be connected directly to the mid-point of the heater transformer winding or to the mid-point of a low resistance connected across the heater terminals. For direct current operation the cathode may be connected to either end of the heater. If voltage is applied between the heater and cathode, it should be kept low and must not exceed 30 volts.

Characteristics—Typical curves showing plate current as a function of grid voltage for several values of plate voltage are shown in Figure 5. Corresponding amplification factor, plate resistance and transconductance characteristics are given in Figures 6, 7 and 8, respectively. Plate current is shown as a function of plate voltage for several values of grid voltage in Figure 9.

Operating Conditions and Output—Permissible operating plate and grid voltages are included within the area, ABCD, in Figure 5. Amplification factor, plate resistance, transconductance and performance data for a number of typical operating conditions are given in the table. Recommended conditions or others of no greater severity should be selected in preference to maximum conditions wherever possible. The life of the tube at maximum conditions may be shorter than at less severe conditions.

In the last four columns of the table are given the fundamental power output, P_m, in milliwatts, the fundamental voltage output, E_{pm}, in peak volts, and the second and third harmonic levels, F_{2m} and F_{3m}, in db below the fundamental, corresponding to each of the recommended and maximum operating conditions for the indicated values of load resistance. The peak value of the sinusoidal input voltage, E_{gm}, in each case is numerically equal to the grid biasing voltage. For a smaller input voltage, E_g, the fundamental power, voltage output and the harmonic levels are given approximately by the following relations:

$$P = P_m \left(\frac{E_g}{E_{gm}}\right)^2$$

$$E_p = E_{pm} \frac{E_g}{E_{gm}}$$

$$F_2 = F_{2m} + 20 \log_{10} \frac{E_{gm}}{E_g}$$

$$F_3 = F_{3m} + 40 \log_{10} \frac{E_{gm}}{E_g}$$

Hum—The disturbance produced in the plate circuit of an indirectly heated cathode type tube by alternating current operation of the heater has two main frequency components. One is of the same frequency as the alternating heater voltage and the other is of double this frequency. With a plate voltage of 135 volts, a grid bias of −4.5 volts, a load resistance of 15,000 ohms and with the cathode connected to the mid-point of the heater circuit, the mean hum output level of a typical tube at the supply frequency is 116 db below 1 milliampere. The range of levels of individual tubes extends from 105 to 123 db below 1 milliampere. At double the supply frequency, the mean level is 122 db below 1 milliampere, and the range of levels of individual tubes extends from 114 to 131 db below 1 milliampere.

These tubes have high insulation resistance and low capacitance between grid and heater. When reasonable care is exercised to keep the insulation leakage and capacitance small between the grid and heater leads in the external wiring, a resistance of 2 megohms may be used in the grid circuit without materially affecting the hum level.

To minimize hum it is important that the impedance in the cathode lead be kept low at both the supply frequency and double the supply frequency. If this impedance is 50 ohms or more at either frequency some reduction in hum output may be obtained by biasing the center point of the heater 10 to 15 volts positive with respect to the cathode.

Microphonic Noise—With a plate voltage of 135 volts, a grid bias of −4.5 volts and a load resistance of 100,000 ohms, the mean microphonic noise output level, measured in a laboratory reference test set, is 54 db below 1 volt. The range of levels of individual tubes extends from 38 to 65 db below 1 volt. Since microphonic noise depends on the type and intensity of the mechanical disturbance which produces it, the values given here are useful chiefly for comparison with the levels of other tubes which have been tested in the same way.

Fluctuation Noise—An irreducible minimum of noise in a vacuum tube is produced by minute uncontrollable fluctuations in the rate of flow of electrons to the anode. With a plate voltage of 135 volts, a grid bias of −4.5 volts and a load resistance of 100,000 ohms the mean equivalent fluctuation noise input of a typical tube for the audio-frequency range from 40 to 10,600 cycles is 112 db below 1 volt. The equivalent noise input voltage is equal to the measured output voltage divided by the voltage amplification of the tube in the measuring circuit. Individual tubes may deviate from the average value by as much as 5 db. By changing the plate voltage to 36 volts and the grid bias to −1 volt, the mean fluctuation noise level may be reduced to about 120 db below 1 volt without seriously affecting the voltage amplification.

TABLE

Plate Voltage Volts	Grid Voltage Volts	Plate Current Milli-amperes	Ampli-fication Factor	Plate Resis-tance Ohms	Trans-conduc-tance Micro-mhos	Load Resistance Ohms	Power Output Milli-watts	Voltage Output Peak Volts	Second Har-monic db	Third Har-monic db
100	−2.0	3.2	16.6	16,300	1020	16,300	8	16	31	50
						40,000	7	23	35	50
						100,000	4	29	38	50
100	−3.0	2.2	15.9	18,500	860	18,500	15	24	26	55
						40,000	13	33	30	60
						100,000	8	40	33	65
100	−4.0	1.4	15.3	21,800	700	21,800	22	31	22	50
						40,000	20	40	26	65
						100,000	14	52	31	50
120	−3.0	3.4	16.2	16,100	1010	16,100	17	24	27	55
						40,000	15	35	32	60
						100,000	9	42	34	65
120	−4.5	2.1	15.5	19,800	780	19,800	31	35	23	55
						40,000	27	47	27	55
						100,000	17	58	31	50
120	−6.0	1.0	14.8	26,600	560	26,600	39	45	19	35
						40,000	37	55	22	45
						100,000	24	70	28	50
*140	−4.5	3.2	15.8	17,000	930	17,000	38	36	25	65
						40,000	31	50	29	55
						100,000	18	60	32	50
140	−6.0	1.9	15.2	20,700	730	20,700	52	46	21	45
						40,000	46	61	25	55
						100,000	29	76	30	50
140	−7.5	1.0	14.7	28,100	520	100,000	39	88	27	55
*160	−6.0	3.0	15.5	17,700	880	17,700	63	47	23	60
						40,000	53	65	28	50
						100,000	31	79	31	45
160	−7.5	1.8	15.0	22,000	680	22,000	78	58	19	40
						40,000	70	75	24	65
						100,000	44	94	29	50
160	−9.0	0.9	14.5	29,600	490	100,000	54	104	25	60
*180	−7.5	2.8	15.3	18,300	840	18,300	95	59	22	50
						40,000	80	80	26	55
						100,000	48	98	31	50
*180	−9.0	1.7	14.8	22,700	650	22,700	100	68	17	35
						40,000	94	87	22	45
						100,000	61	110	29	50
*180	−10.5	0.8	14.3	30,600	470	100,000	69	117	24	50

*Maximum operating conditions

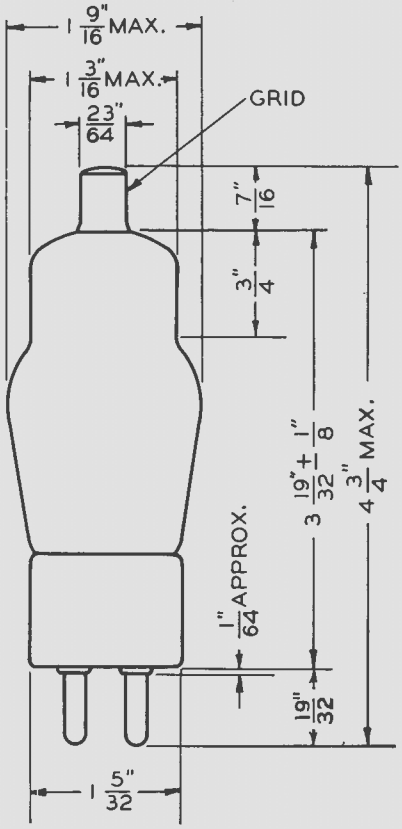

FIG. 1

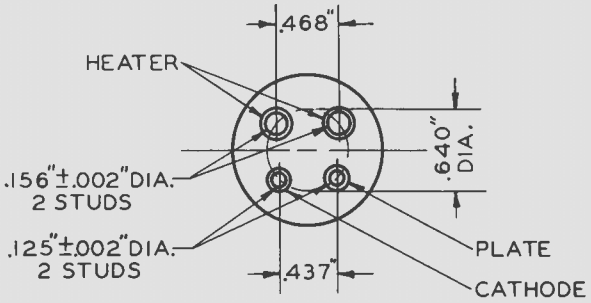

FIG. 2

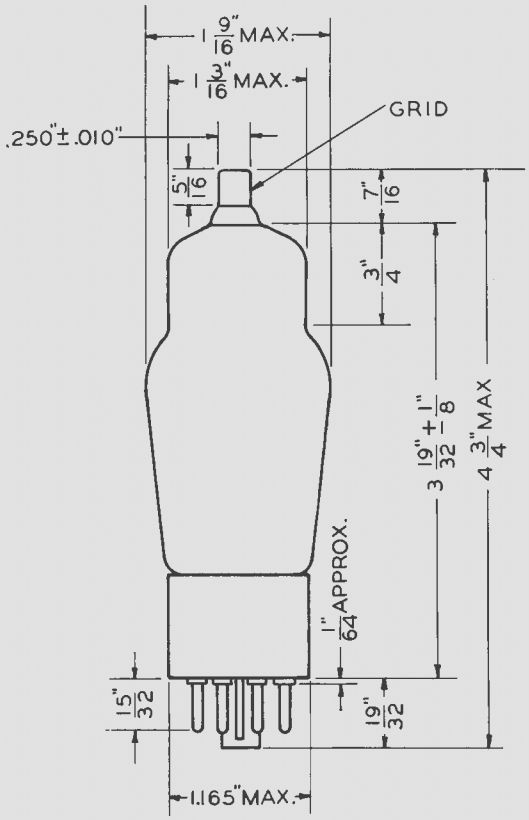

FIG. 3

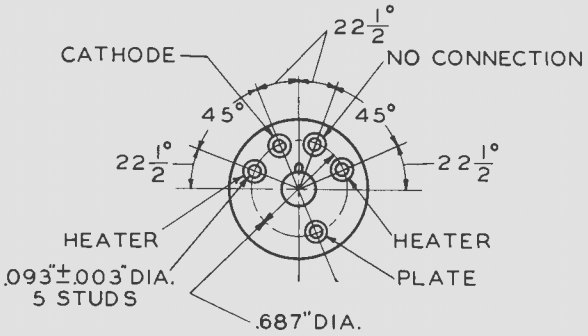

FIG. 4

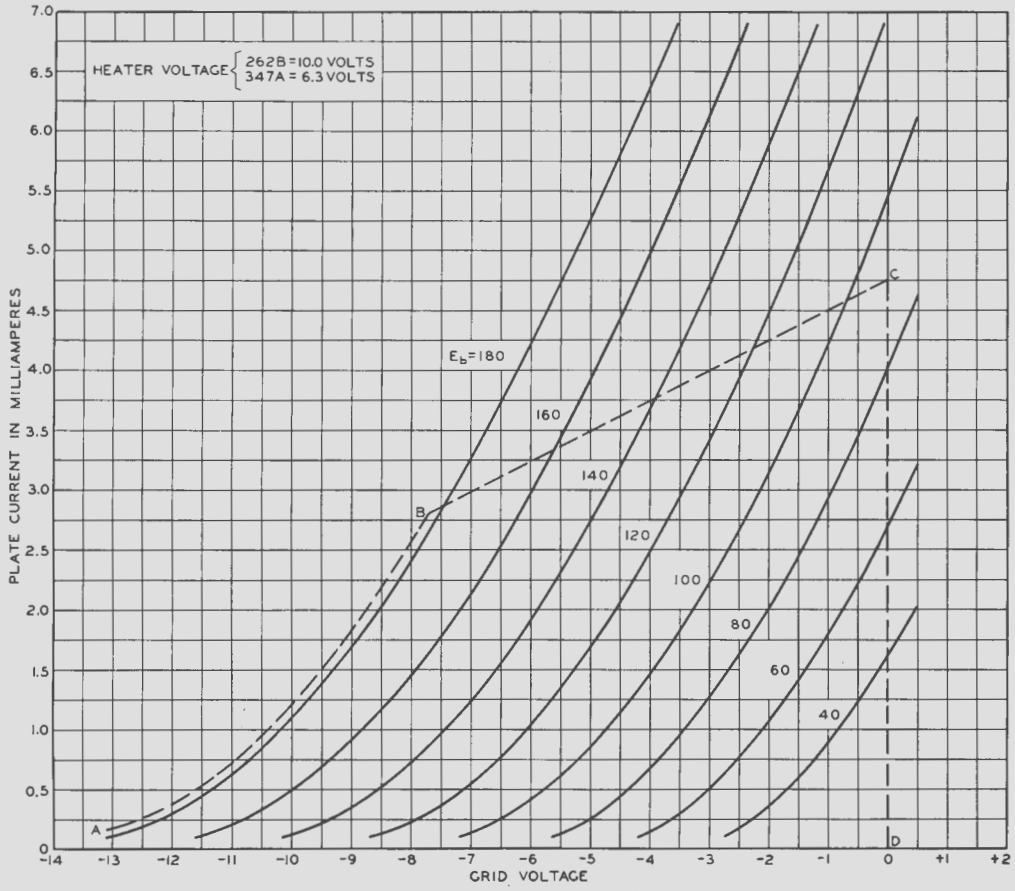
HEATER VOLTAGE
262B = 10.0 VOLTS
347A = 6.3 VOLTS
PLATE CURRENT IN MILLIAMPERES
GRID VOLTAGE
E_b = 180
160
140
120
100
80
60
40
A
B
C
D
7.0
6.5
6.0
5.5
5.0
4.5
4.0
3.5
3.0
2.5
2.0
1.5
1.0
0.5
0
-14
-13
-12
-11
-10
-9
-8
-7
-6
-5
-4
-3
-2
-1
0
+1
+2

FIG. 5

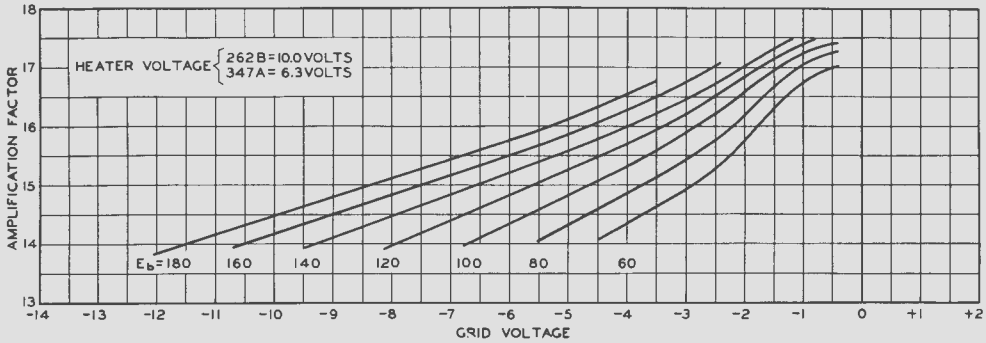

FIG. 6

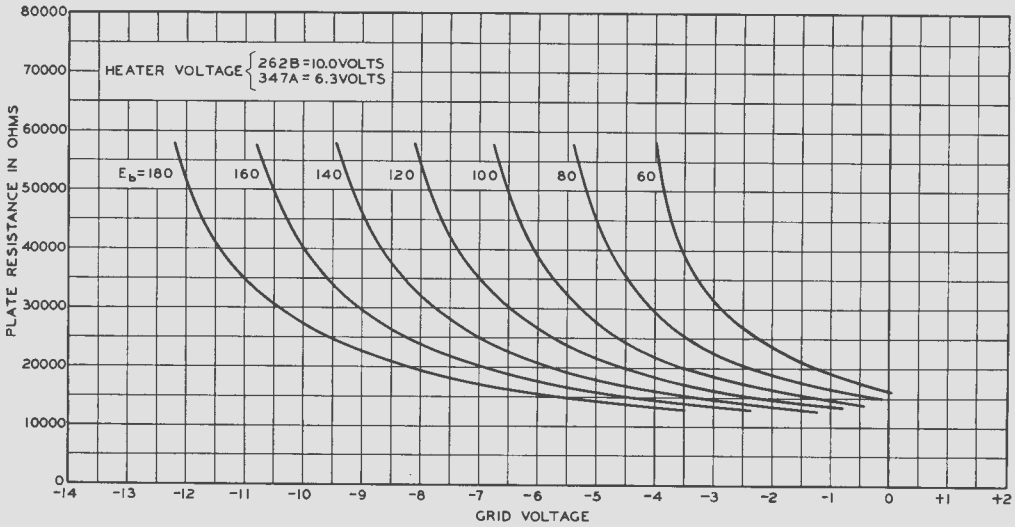

FIG. 7

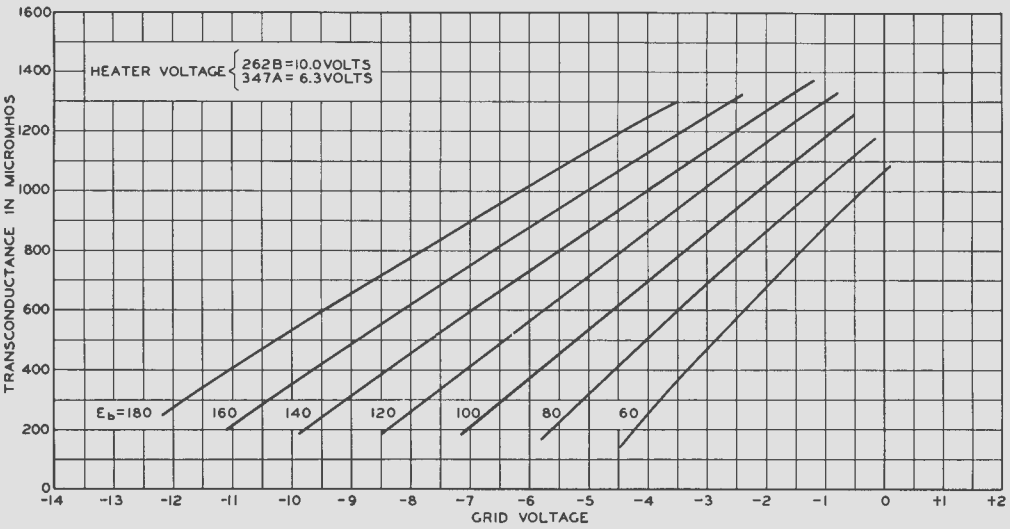

FIG. 8

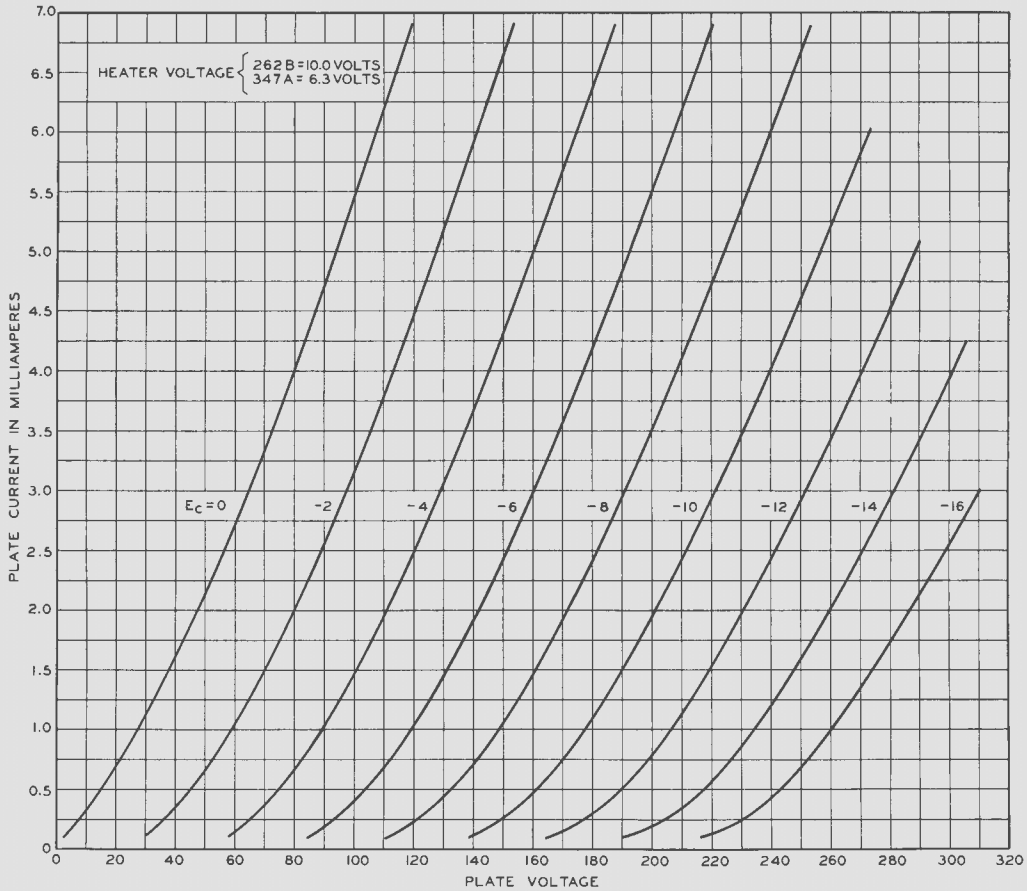
HEATER VOLTAGE
262B=10.0 VOLTS
347A= 6.3 VOLTS
E_C=0
-2
-4
-6
-8
-10
-12
-14
-16
PLATE CURRENT IN MILLIAMPERES
PLATE VOLTAGE
0
0.5
1.0
1.5
2.0
2.5
3.0
3.5
4.0
4.5
5.0
5.5
6.0
6.5
7.0
0
20
40
60
80
100
120
140
160
180
200
220
240
260
280
300
320

FIG. 9