Western Electric

336A and 349A Vacuum Tubes

Classification—Suppressor-grid pentodes with indirectly heated cathodes, intended for Class A Service

The 336A and 349A tubes differ in heater ratings and type of base. In all other respects they are identical.

These tubes are intended for use primarily as audio-frequency power amplifiers where power outputs of approximately 3.5 watts are required with a plate voltage not in excess of 250 volts. The suppressor grid is permanently connected to the cathode within the tube.

Dimensions and Connections—The outline diagrams of the tube and base giving the dimensions and the arrangement of electrode connections to the base terminals for the 336A tube are shown in Figure 1. Similar information for the 349A tube is shown in Figure 2.

Base and Mounting—The 336A tube employs a small six-pin thrust type base with silver-plated pins. It is adapted for use in a standard six-contact type socket, preferably one provided with silver-plated contacts such as the Western Electric 144B socket.

The 349A tube employs a small shell octal seven-pin base.

These tubes may be mounted in any position.

Average Direct Interelectrode Capacitances

Control grid to plate	0.65	$\mu\mu f$
Control grid to heater, cathode and screen grid	12	$\mu\mu f$
Plate to heater, cathode and screen grid	9	$\mu\mu f$

Heater Ratings

	336A Tube	349A Tube
Heater voltage	10.0	6.3 volts, a-c or d-c
Nominal heater current	0.64	1.0 ampere

The heater elements of these tubes are designed to operate on a voltage basis and should be operated at as near the rated voltage as practicable.

The voltage between the cathode and heater should not exceed 60 volts.

Copyright, 1941, Western Electric Company, Incorporated

Characteristics—Figures 3 and 4 show plate current and screen-grid current respectively, as functions of control-grid voltage for several values of screen-grid and plate voltage. In all curves the plate voltage is equal to the screen-grid voltage. Plate current and screen-grid current are shown as functions of plate voltage in Figures 5 and 6, respectively, for a screen-grid voltage of 250 volts and for several values of control-grid voltage. Transconductance and plate resistance as functions of control-grid voltage are shown in Figure 7 for two values of screen-grid and plate voltage. The plate voltage in each case is equal to the screen-grid voltage. Transconductance and plate resistance as functions of screen-grid voltage are shown in Figure 8 for a plate voltage of 250 volts and two values of control-grid voltage.

Limiting Conditions For Safe Operation

Maximum plate voltage	250 volts
Maximum screen-grid voltage	250 volts
Maximum cathode current (Plate current plus screen-grid current)	50 milliamperes
Maximum direct screen-grid current	10 milliamperes

For fixed bias, the resistance in the grid circuit should not exceed 50,000 ohms. The maximum grid resistance, when self-bias is used, may be 0.5 megohm.

Operating Conditions and Output—Table No. 1 shows amplification factor, plate resistance, transconductance and performance data for a number of typical operating conditions with the tubes operating singly as pentodes. Less severe operating conditions should be selected in preference to maximum operating conditions wherever possible. The life of the tube at maximum conditions will be shorter than at less severe conditions.

The performance data include the fundamental power output for the indicated values of load resistance and input voltage, and the maximum second and third harmonic levels for input voltages not exceeding the indicated values. Under certain conditions the maximum second harmonic level occurs at a lower input voltage than that given in Table 1. The power output is given in watts and the harmonic levels in decibels below the fundamental.

TABLE 1
SINGLE TUBE-PENTODE

Plate Voltage Volts	Screen-Grid Voltage Volts	Control-Grid Voltage Volts	Plate Current Milliamperes	Amplification Factor	Plate Resistance Ohms	Transconductance Micromhos	Load Resistance Ohms	Input Voltage Peak Volts	Power Output Watts	Second Harmonic db	Third Harmonic db
180	180	−8.0	28	296	70,000	4230	4000	8	1.6	22	31
							7000	5	1.1	34	34
							7000	8	2.0	34	23
							10000	8	2.0	20	20
250	180	−8.0	29	352	81,000	4340	4000	8	1.9	22	38
							7000	5	1.2	26	39
							7000	8	2.7	25	29
							10000	8	3.0	31	23
*250	*250	−14.0	31	336	80,000	4200	4000	14	4.7	17	23
							5000	14	4.9	21	20
							6000	8	2.5	25	31
							6000	14	5.0	25	17
							7000	5	1.2	29	40
							7000	10	3.8	28	22
							7000	14	5.1	28	16
							8000	8	2.8	30	26
							8000	14	5.0	29	16
							9000	14	4.8	23	16
							10000	14	4.5	20	16

*Maximum operating condition.

Table No. 2 shows amplification factor, plate resistance, transconductance and performance data for typical operating conditions when the tubes are operated singly as triodes and when two tubes are operated as push-pull pentodes.

TABLE 2

	Single Tube Screen Connected To Plate	Two Tubes Push-Pull Connected
	As A Triode	As Pentodes
Plate voltage	250	250 volts
Screen-grid voltage	—	250 volts
Control-grid voltage	—15	—18 volts
Peak input voltage	15	36 volts
Plate current	*32	*24 milliamperes
Plate current	**35	**65 milliamperes
Screen current	—	*7 milliamperes
Screen current	—	**21 milliamperes
Plate resistance	2150	— ohms
Mutual conductance	4800	— micromhos
Amplification factor	10.3	—
Load Resistance	4000	7000 ohms
Power output	1.2	8.5 watts
Second harmonic	***25	***35 db below fundamental
Third harmonic	***45	26 db below fundamental

*Zero signal **Maximum signal ***Approximate value

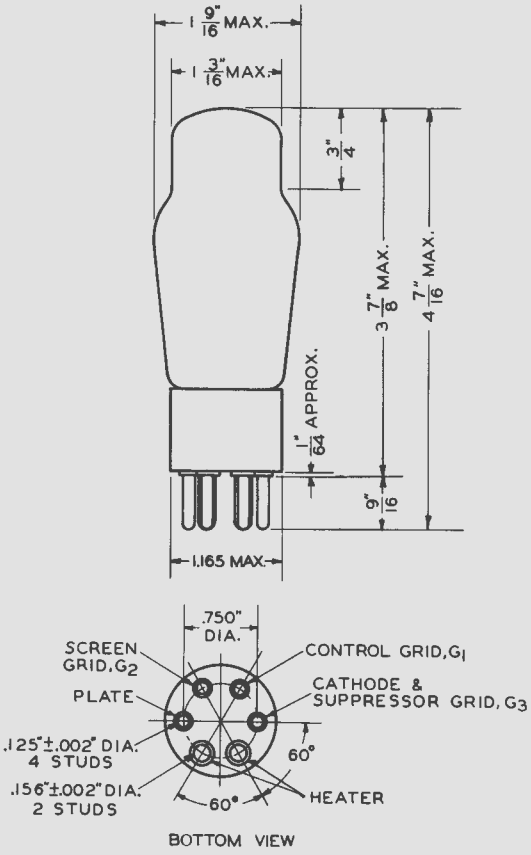

FIG. 1

336A

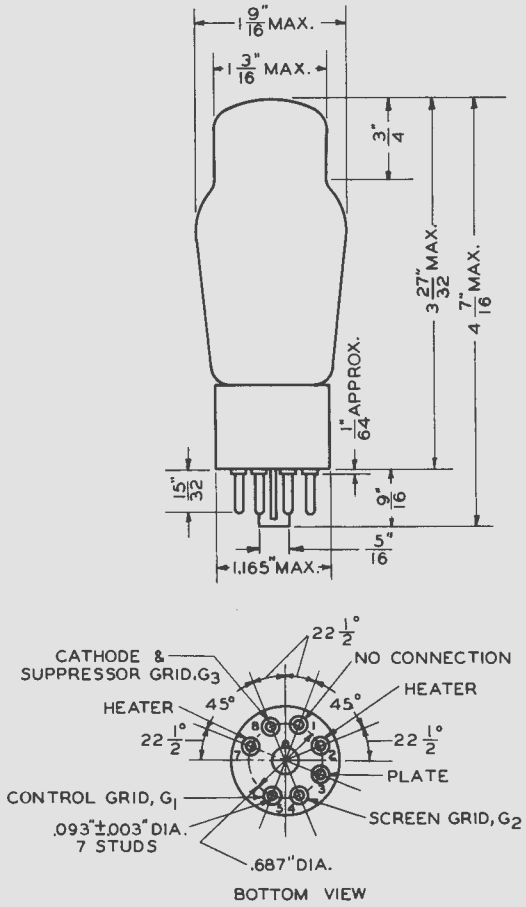

FIG. 2

349A

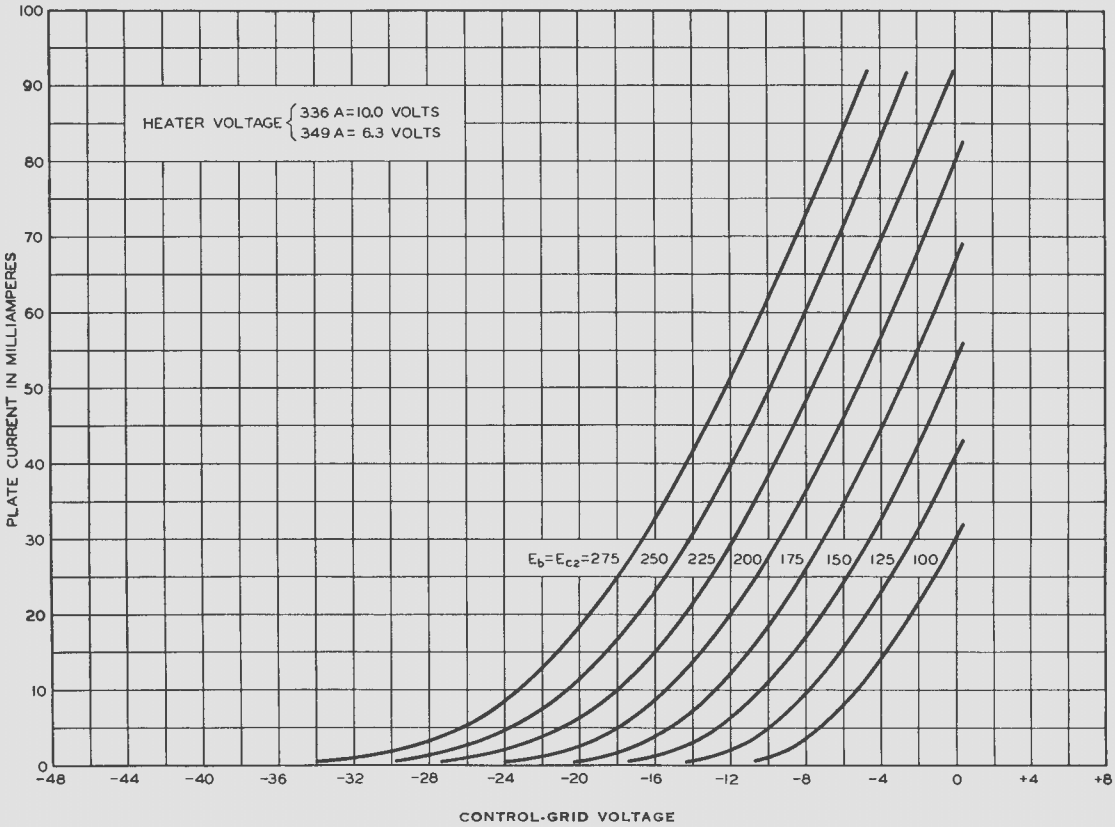
HEATER VOLTAGE { 336 A=10.0 VOLTS
349 A= 6.3 VOLTS
$E_b=E_{c2}$=275 250 225 200 175 150 125 100
PLATE CURRENT IN MILLIAMPERES
CONTROL-GRID VOLTAGE
0 10 20 30 40 50 60 70 80 90 100
-48 -44 -40 -36 -32 -28 -24 -20 -16 -12 -8 -4 0 +4 +8

FIG. 3

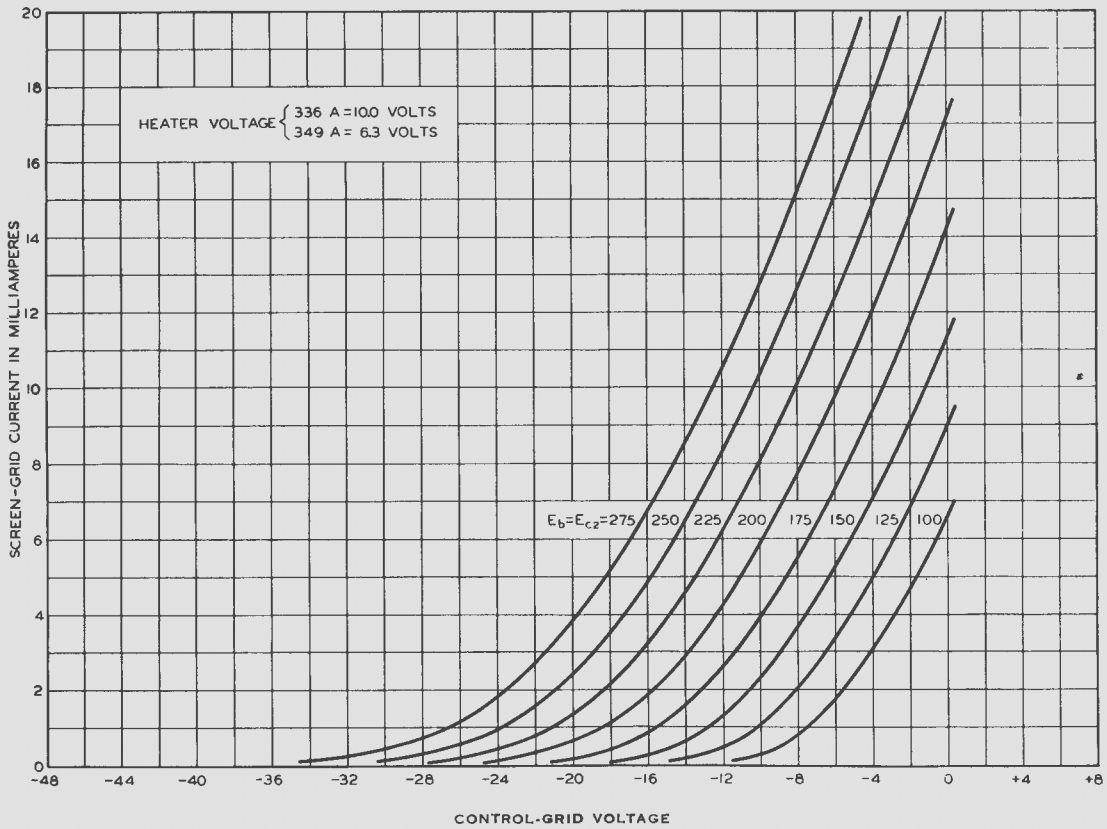
HEATER VOLTAGE { 336 A=10.0 VOLTS
349 A= 6.3 VOLTS
$E_b=E_{c2}$=275 250 225 200 175 150 125 100
SCREEN-GRID CURRENT IN MILLIAMPERES
CONTROL-GRID VOLTAGE
0 2 4 6 8 10 12 14 16 18 20
-48 -44 -40 -36 -32 -28 -24 -20 -16 -12 -8 -4 0 +4 +8

FIG. 4

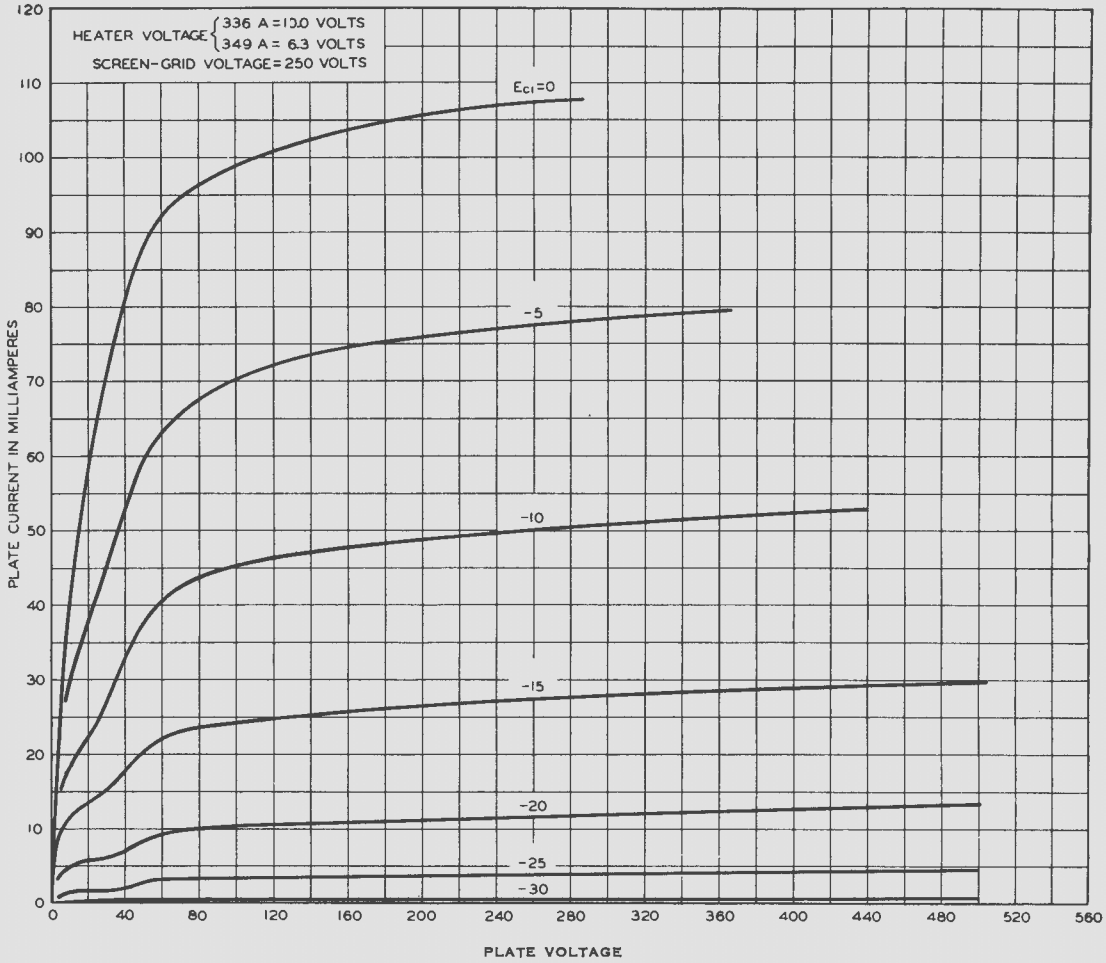
HEATER VOLTAGE { 336 A = 10.0 VOLTS
349 A = 6.3 VOLTS
SCREEN-GRID VOLTAGE = 250 VOLTS
Ec1=0
-5
-10
-15
-20
-25
-30
PLATE CURRENT IN MILLIAMPERES
PLATE VOLTAGE
0
10
20
30
40
50
60
70
80
90
100
110
120
0
40
80
120
160
200
240
280
320
360
400
440
480
520
560

FIG. 5

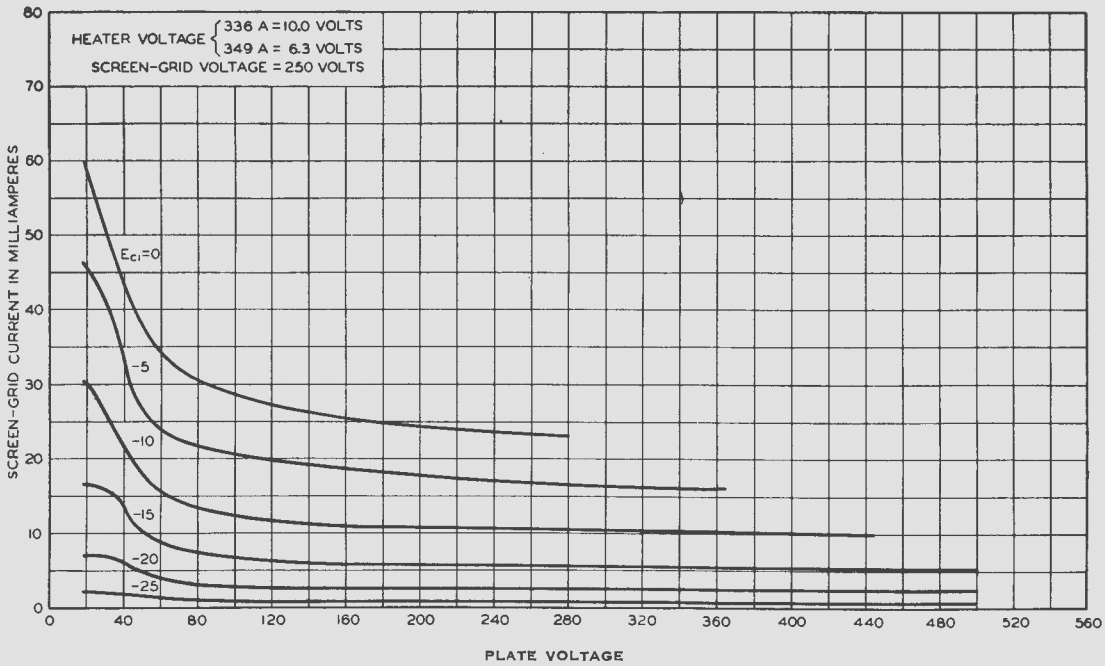
HEATER VOLTAGE { 336 A = 10.0 VOLTS
349 A = 6.3 VOLTS
SCREEN-GRID VOLTAGE = 250 VOLTS
Ec1=0
-5
-10
-15
-20
-25
SCREEN-GRID CURRENT IN MILLIAMPERES
PLATE VOLTAGE
0
10
20
30
40
50
60
70
80
0
40
80
120
160
200
240
280
320
360
400
440
480
520
560

FIG. 6

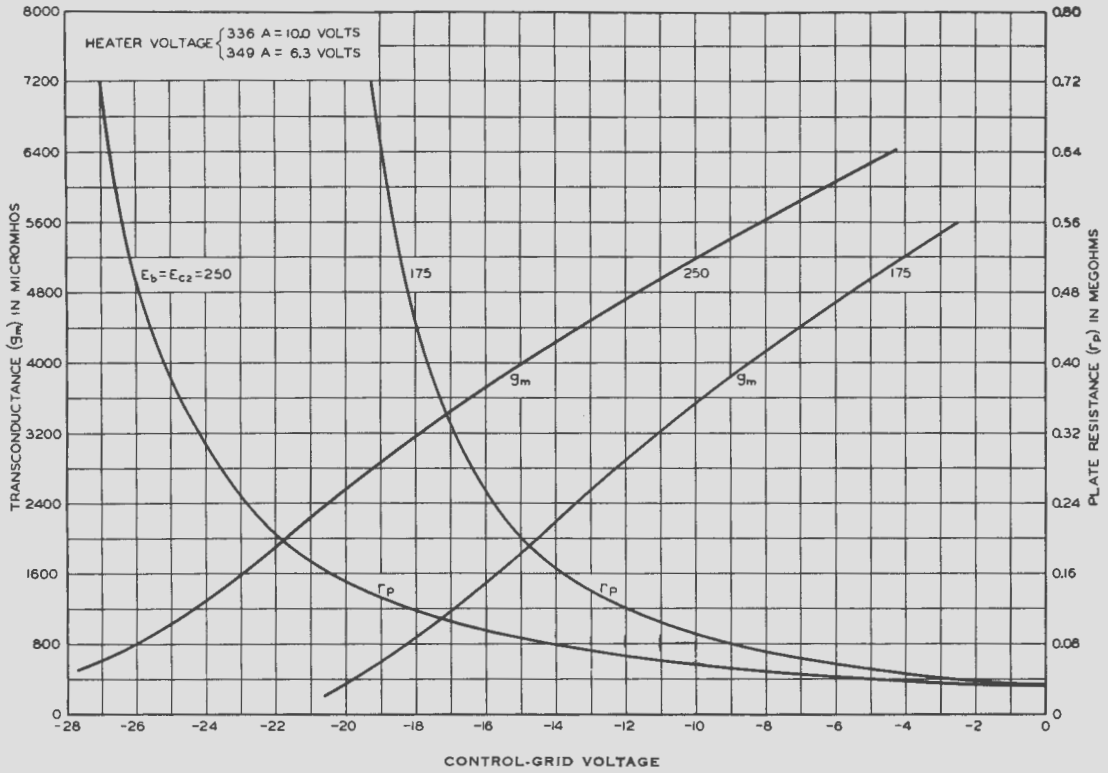
HEATER VOLTAGE { 336 A = 10.0 VOLTS
349 A = 6.3 VOLTS
$E_b = E_{c2} = 250$
175
250
175
g_m
g_m
r_p
r_p
TRANSCONDUCTANCE (g_m) IN MICROMHOS
PLATE RESISTANCE (r_p) IN MEGOHMS
CONTROL-GRID VOLTAGE

FIG. 7

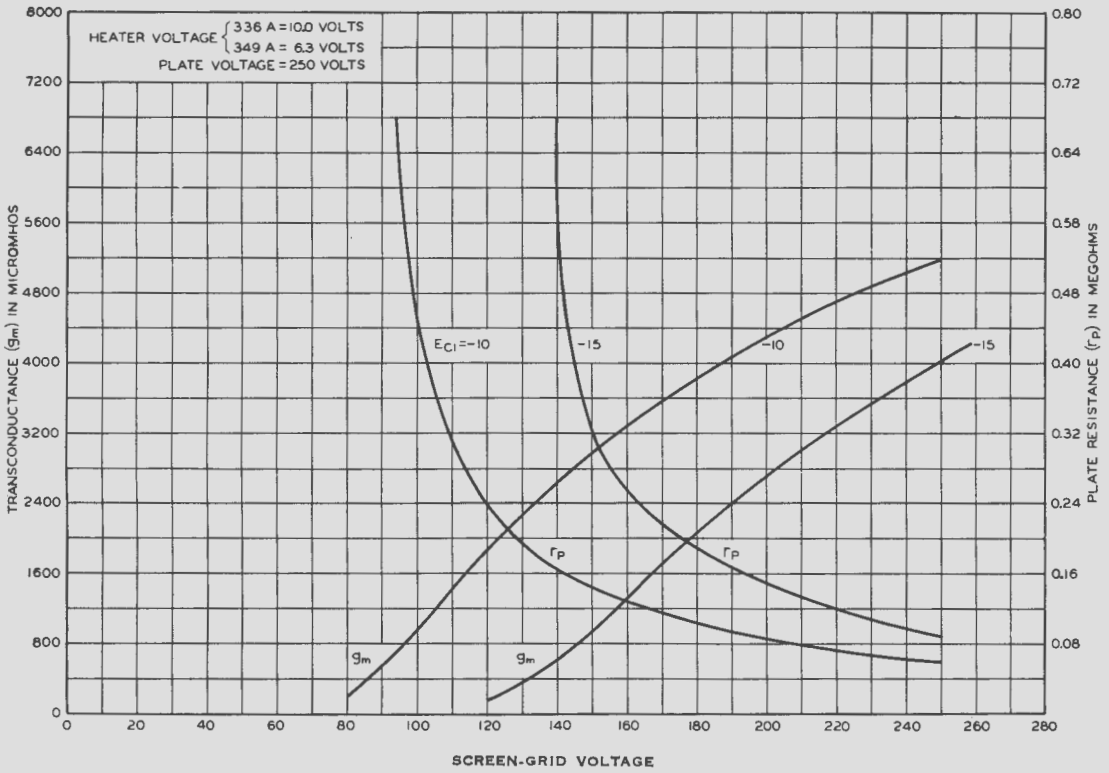
HEATER VOLTAGE { 336 A = 10.0 VOLTS
349 A = 6.3 VOLTS
PLATE VOLTAGE = 250 VOLTS
$E_{C1} = -10$
-15
-10
-15
r_p
r_p
g_m
g_m
TRANSCONDUCTANCE (g_m) IN MICROMHOS
PLATE RESISTANCE (r_p) IN MEGOHMS
SCREEN-GRID VOLTAGE

FIG. 8