Western Electric

300A and 300B Vacuum Tubes

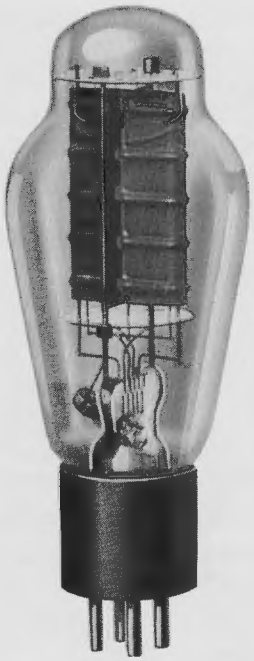

Classification—Moderate power, filamentary triodes for Class A service

These tubes are identical except for the location of the bayonet pin in the base.

Application—Audio-frequency amplifier in positions where power outputs of approximately ten watts or less are required at relatively low plate voltages.

Dimensions—Dimensions, outline diagrams of the tubes and bases, and the arrangement of electrode connections to the base terminals are shown in Figures 1 and 2.

Copyright 1939, Western Electric Company, Incorporated

Base and Mounting—These vacuum tubes employ medium, four-pin thrust type bases suitable for use in Western Electric 143B or similar sockets. The 300B tube has the bayonet pin so located that it may also be mounted in a Western Electric 100M, 115B or similar socket.

The tubes may be mounted in either a vertical or horizontal position. If mounted in a horizontal position, the plane of the filament, which is indicated in Figure 2, should be vertical.

Average Direct Interelectrode Capacitances

Grid to plate	15 $\mu\mu$f.
Grid to filament	9 $\mu\mu$f.
Plate to filament	4.3$\mu\mu$f.

Filament Rating

Filament voltage	5.0 volts, a.c. or d.c.
Nominal filament current	1.2 amperes

The filaments of these tubes are designed to operate on a voltage basis and should be operated at as near the rated voltage as possible. When alternating current is used for heating the filament, the grid and plate returns should be connected to a center tap on the secondary of the filament transformer.

Characteristics—Average characteristics—($E_f = 5.0$ volts, a.c., $E_b = 300$ volts and $E_c = -61$ volts).

Plate current	60 milliamperes
Amplification factor	3.85
Plate resistance	700 ohms
Grid to plate transconductance	5500 micromhos

Plate-current characteristics for a typical tube are shown in Figure 3 as functions of grid bias, for alternating-current filament supply. The corresponding amplification-factor, plate-resistance, and transconductance characteristics are given in Figures 4, 5 and 6, respectively. When direct-current filament supply is used, and the grid and plate returns are connected to the negative end of the filament, the same characteristics are applicable if 3.5 is subtracted from the numerical value of each grid bias.

Limiting Operating Conditions for Safe Operation—not simultaneous ratings

Maximum plate voltage	450 volts
Maximum plate dissipation	40 watts
Maximum plate current of average tube for fixed grid bias	70 milliamperes
Maximum plate current for manually adjusted grid bias or self-biasing circuit	100 milliamperes

Recommended Operating Conditions

Recommended and maximum conditions for alternating-current filament supply are given in the table. Recommended conditions or others of no greater severity should be selected in preference to maximum conditions wherever possible. The life of the tube at maximum operating conditions will be shorter than at the recommended conditions.

Where it is necessary to operate the tube at or near the maximum plate current of 100 milliamperes, provision should be made for adjusting the grid bias of each tube independently, so that the maximum safe plate current will not be exceeded in any tube. Alternatively, a self-biasing circuit may be used, in which the grid bias for the tube is obtained from the voltage drop produced by the plate current of that tube flowing through a resistance.

Where it is necessary to use a fixed grid bias, the plate current of the average tube should be limited to a maximum value of 70 milliamperes, so that tubes having plate currents higher than the average will not exceed the maximum safe plate current.

Power Output and Distortion

Performance data including power output, second and third harmonic levels for a number of operating conditions are given in the table.

The variation of power output and harmonic levels with load resistance for several values of operating plate current are shown in Figures 7, 8 and 9, for a plate voltage of 350 volts.

The peak value of the sinusoidal input voltage, E_{gm}, which gives the indicated power output, P_m, and harmonic levels, F_{2m} and F_{3m}, for each point in both the curves and the table, is numerically equal to the grid biasing voltage at that point. For a smaller input voltage E_g, the approximate levels may be computed from the following relations.

$$P = P_m \left(\frac{E_g}{E_{gm}}\right)^2$$

$$F_2 = F_{2m} + 20 \log_{10} \frac{E_{gm}}{E_g}$$

$$F^3 = F_{3m} + 40 \log_{10} \frac{E_{gm}}{E_g}$$

TABLE

	Plate Voltage	Grid Bias	Plate Current	Load Resistance	Power Output	Second Harmonic	Third Harmonic
	Volts	Volts	Milliamperes	Ohms	Watts	db	db
Recommended	200	— 42	30	2000	3.0	20	31
Operating	200	— 39	40	2500	2.6	26	38
Conditions	200	— 37	50	2500	2.5	30	45
	250	— 55	30	2000	4.9	18	27
	250	— 55	30	4500	3.2	27	40
	250	— 52	40	3000	4.0	26	36
	250	— 50	50	2500	4.4	26	39
	250	— 48	60	2000	4.7	26	38
	250	— 48	60	2700	4.1	30	45
	250	— 45	80	1500	5.0	26	41
	300	— 65	40	2500	6.7	20	30
	300	— 63	50	2000	7.2	21	29
	300	— 63	50	3000	6.1	26	37
	300	— 61	60	2400	6.6	26	37
	300	— 61	60	3400	5.6	30	44
	300	— 58	80	1700	7.5	26	37
	350	— 76	50	3600	7.8	26	38
	350	— 76	50	5000	6.2	30	45
	350	— 74	60	2000	10.2	21	30
	350	— 74	60	3000	8.3	26	38
	350	— 74	60	4000	7.0	30	44
	350	— 71	80	2200	9.6	26	39
	400	— 91	40	5000	8.4	26	37
	400	— 89	50	3000	11.5	21	31
	400	— 89	50	4000	9.4	25	38
	400	— 87	60	3500	10.5	26	38
	400	— 87	60	5000	8.3	30	46
	400	— 84	80	2500	12.5	25	37
Maximum	450	—104	40	6000	9.5	26	38
Operating	450	—102	50	5000	10.7	27	39
Conditions	450	—102	50	6500	9.0	30	45
	450	—100	60	4000	12.5	26	38
	450	—100	60	5500	10.1	30	44
	450	— 97	80	2000	17.8	21	30
	450	— 97	80	3000	14.6	26	37
	450	— 97	80	4500	11.5	31	45

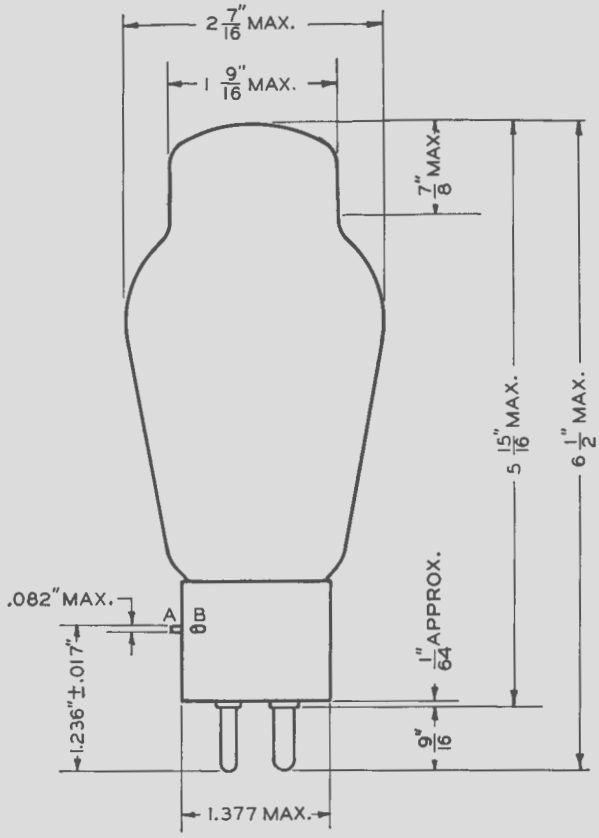

FIG. 1

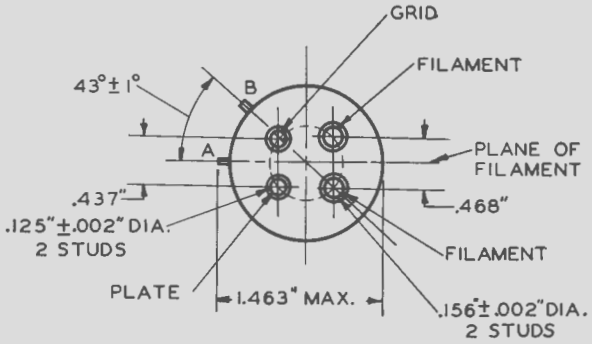

FIG. 2

A—LOCATION OF BAYONET PIN FOR 300A TUBE
B—LOCATION OF BAYONET PIN FOR 300B TUBE

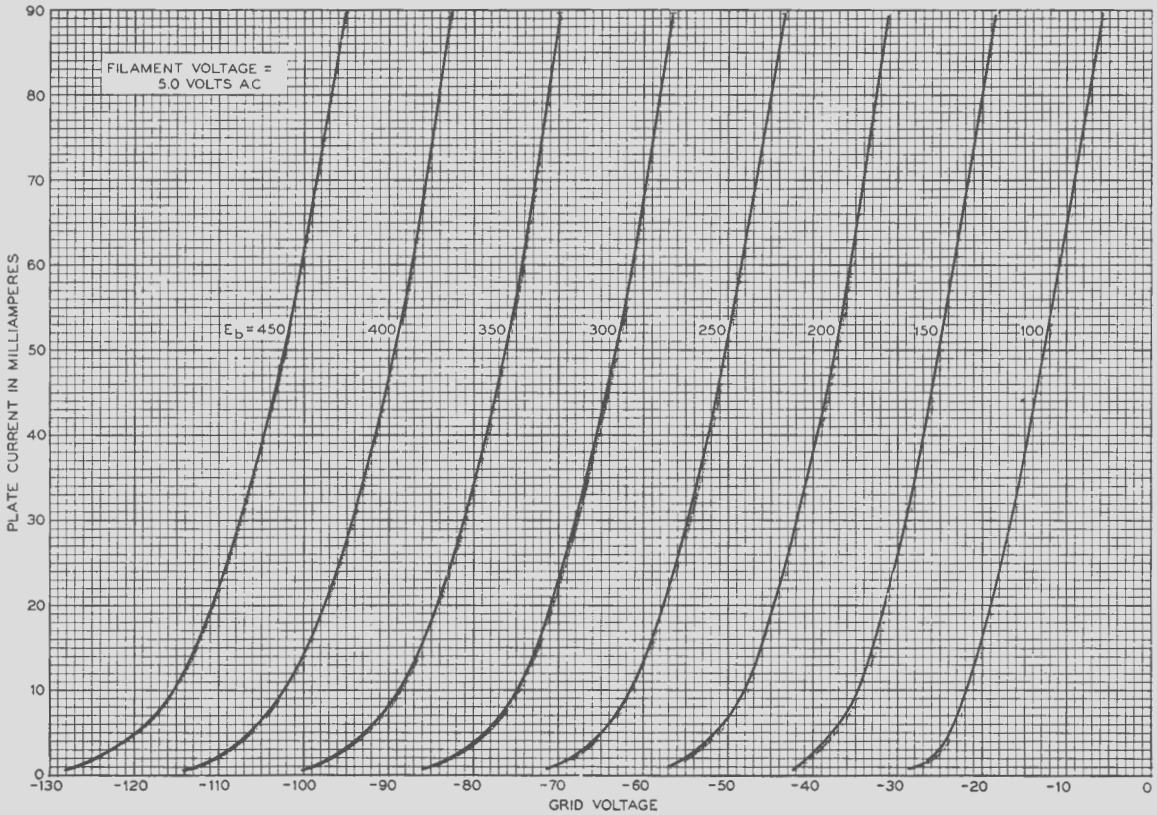

FIG. 3

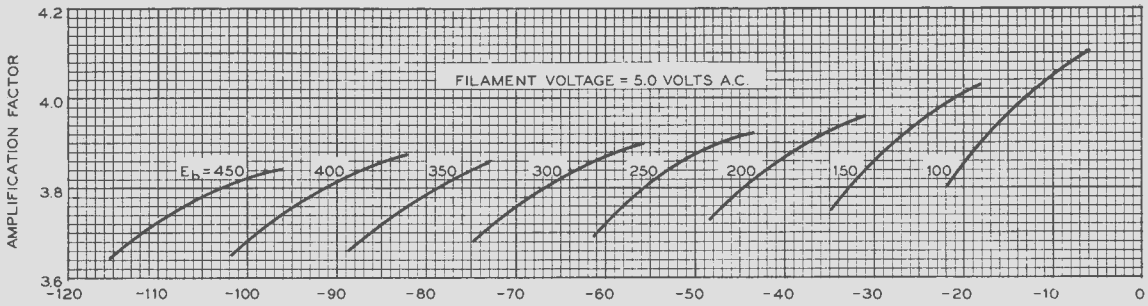

FIG. 4

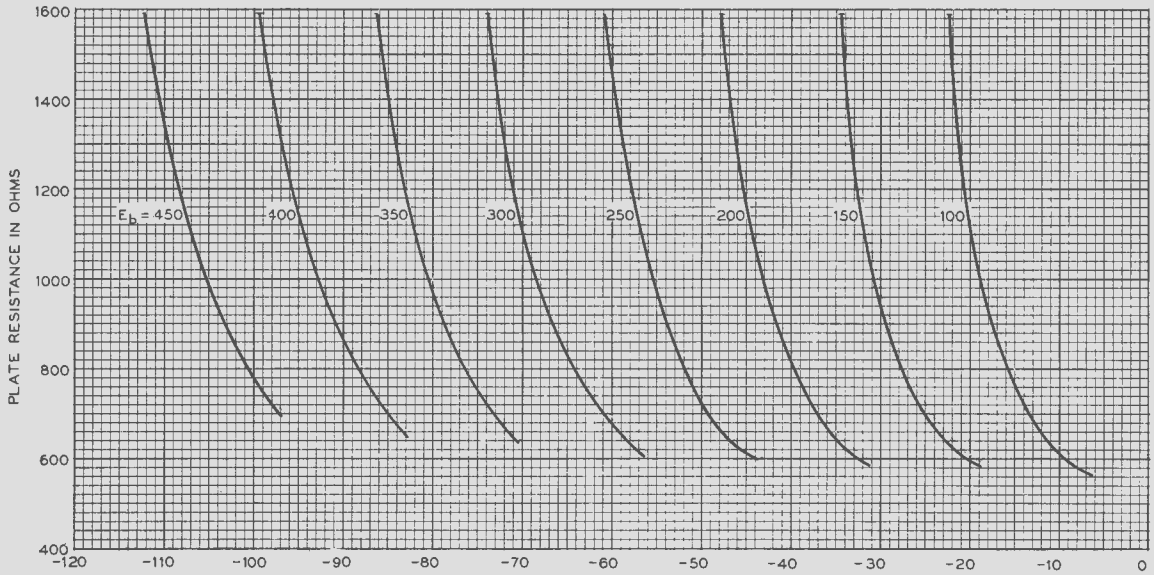

FIG. 5

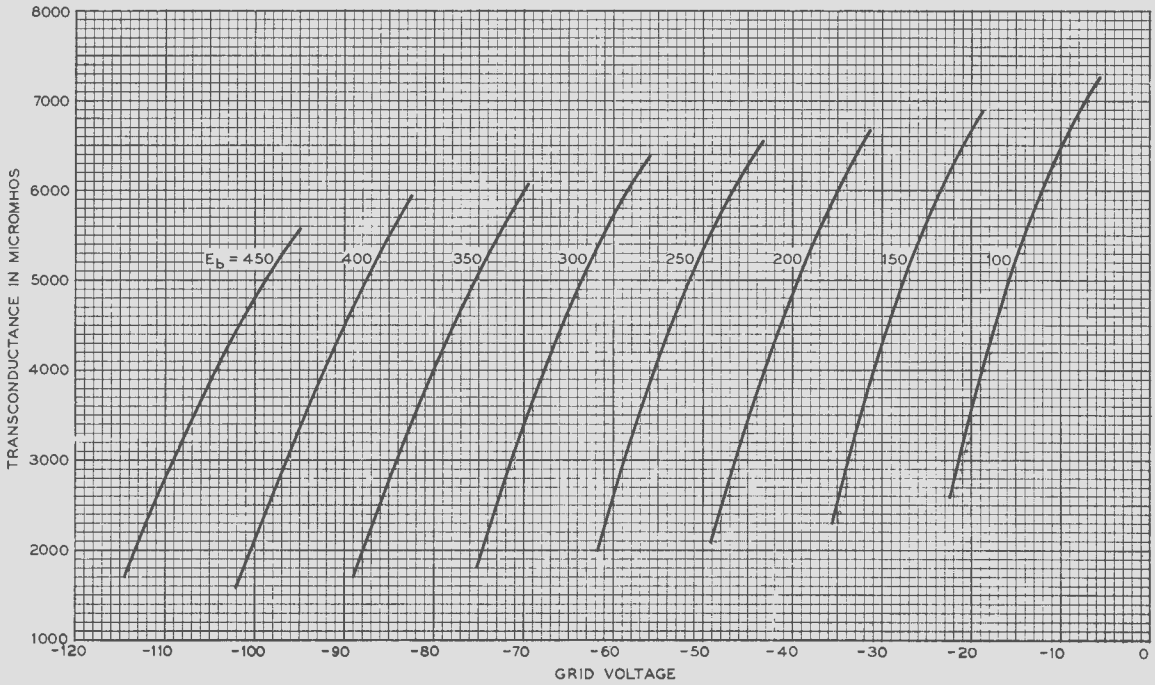

FIG. 6

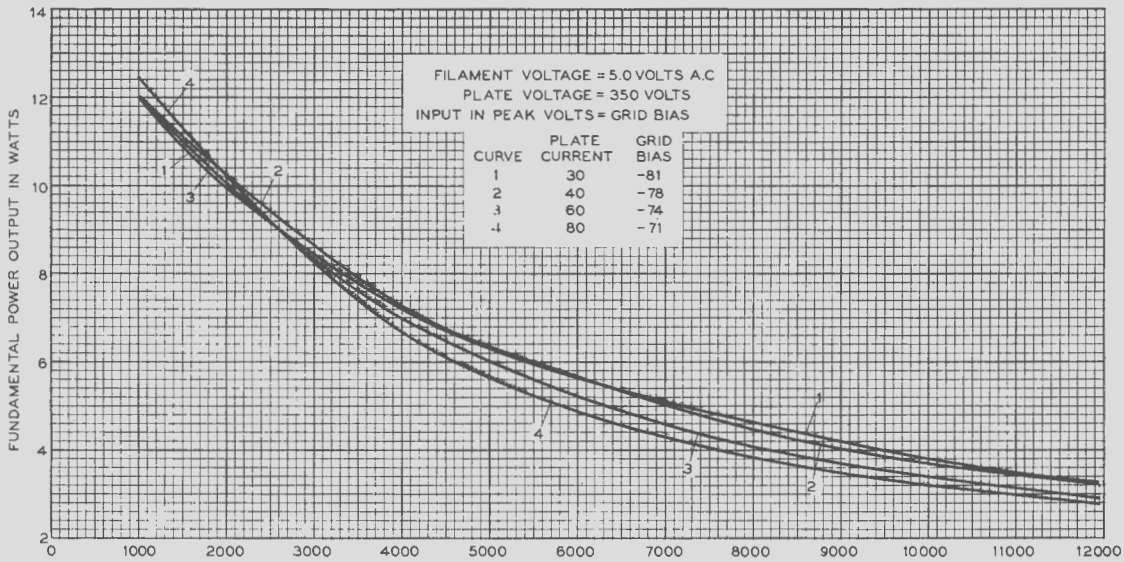

FIG. 7

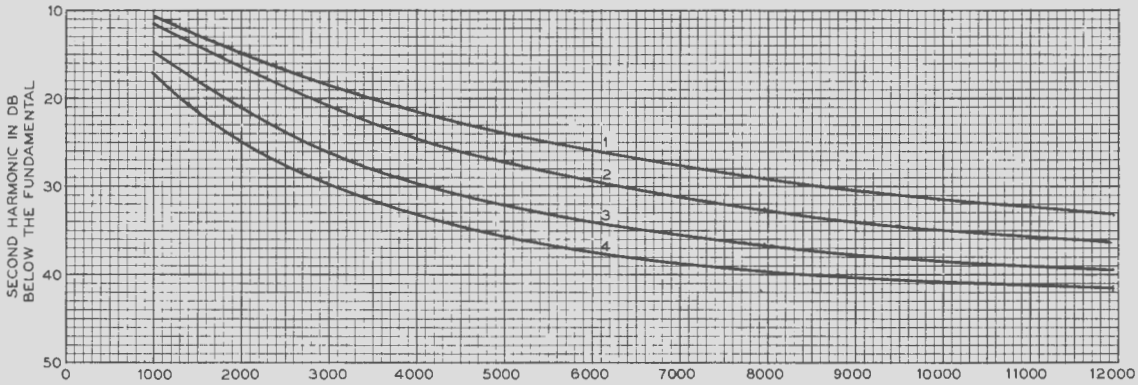

FIG. 8

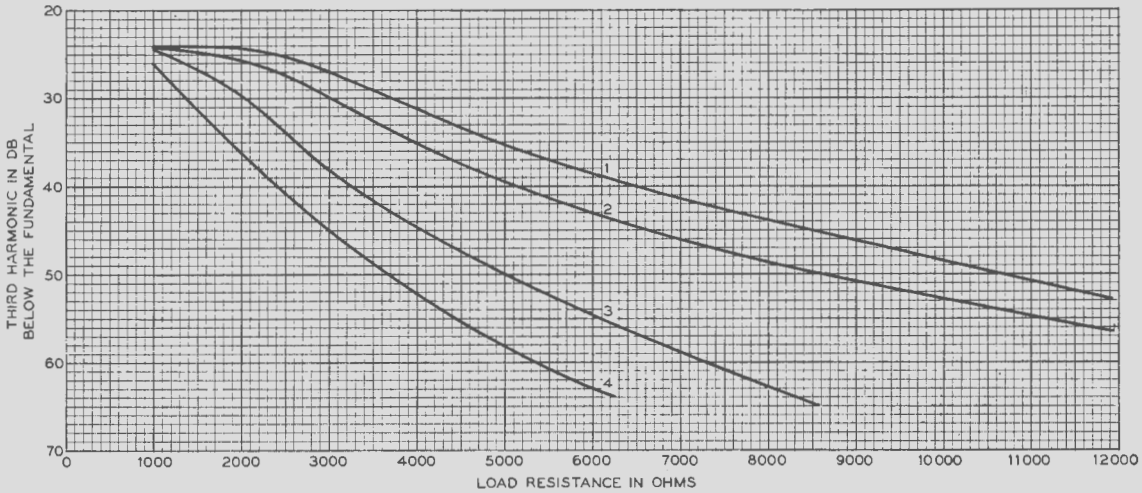

FIG. 9