Western Electric

380A and 381A Vacuum Tubes

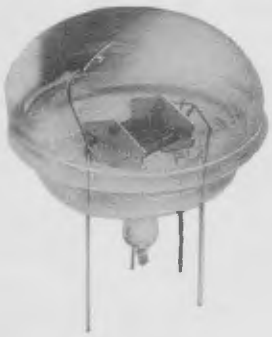

380A

381A

Classification

Diodes with indirectly heated cathodes.

The 380A and 381A vacuum tubes are identical except that the 381A is provided with a base.

Applications—These tubes are intended primarily for use as diode detectors, or diode rectifiers for automatic volume control, at audio, carrier and ultra-high frequencies.

Dimensions—Figures 1, 2, 3 and 4 show dimensions, outline diagrams of the tubes and the arrangement of the electrode connections.

Base—380A—Not based. Connections are made by soldering the leads directly to the circuit elements.

381A—Four-pin, short-shell, intermediate, octal type with silver-plated pins.

Socket—380A—No socket is required. Ordinarily, no additional support other than that of the leads will be required. Where the tube is subjected to vibration or where a definite orientation of the tube is desired, a felt-covered spring clip, bearing against the top of the bulb to hold the tube firmly in a circular seat located under the shoulder of the tube, may be provided.

381A—Standard octal type, preferably provided with silver-plated contacts.

Copyright, 1941, Western Electric Company, Incorporated

Mounting Positions—The tubes may be mounted in any position.

Average Direct Interelectrode Capacitances

	380A	381A
Plate to cathode and heater	1.1 $\mu\mu$f	1.4 $\mu\mu$f

Heater Rating

Heater voltage	6.3 volts, a-c or d-c
Nominal heater current	0.15 ampere

The heaters of these tubes are designed to operate on a voltage basis and should be operated as near the rated voltage as practicable.

Cathode Connection—When alternating heater voltage is used, the cathode should preferably be connected directly to the mid-point of the heater transformer winding or to the mid-point of a low resistance connected across the heater terminals. For direct current operation the cathode may be connected to either end of the heater. If voltage is applied between the heater and cathode, it should be kept low and must not exceed 50 volts.

Limiting Conditions for Safe Operation

Maximum alternating plate voltage	200 volts, rms
Maximum peak inverse voltage	500 volts
Maximum rectified direct plate current	5 milliamperes

Characteristics—Figure 5 shows the current-voltage characteristic.

Figure 6 shows rectification characteristics for a number of values of impressed alternating input voltage. Load lines for zero fixed bias are also shown for resistance values of 0.05, 0.10, 0.25, 0.50 and 1.00 megohm. Each of the characteristic curves shows the relation between the direct voltage impressed on the diode plate and the average diode current as indicated by a direct-current microammeter, for a constant impressed alternating input voltage of the value specified. Where the diode is used as a detector, with the usual condenser-resistance circuit, the direct components of voltage and current developed by any particular alternating-voltage input are given by the coordinates of the point of intersection of the load line with the rectification characteristic corresponding to the input voltage.

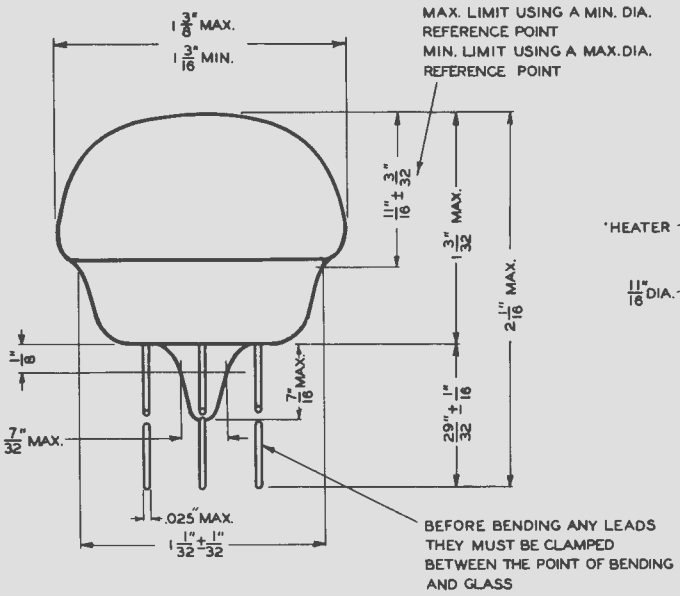

FIG. 1

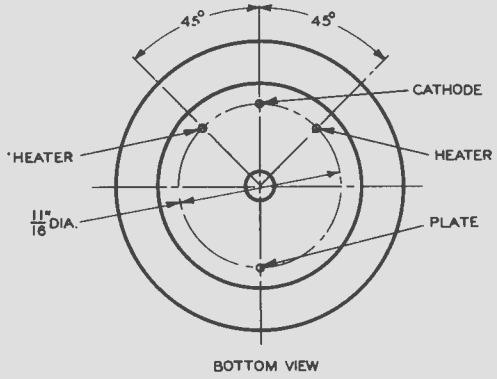

FIG. 2

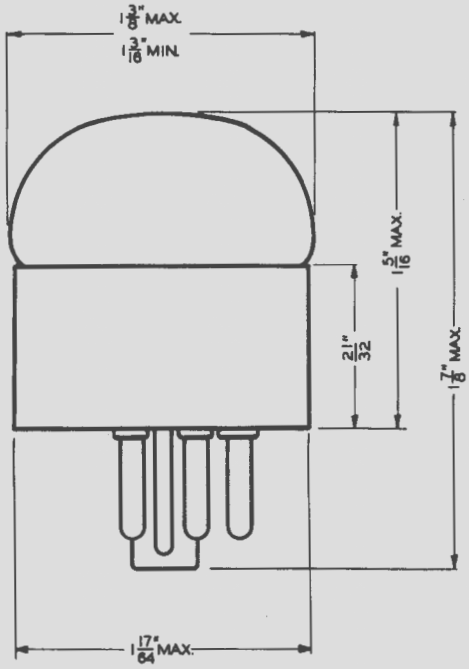

FIG. 3

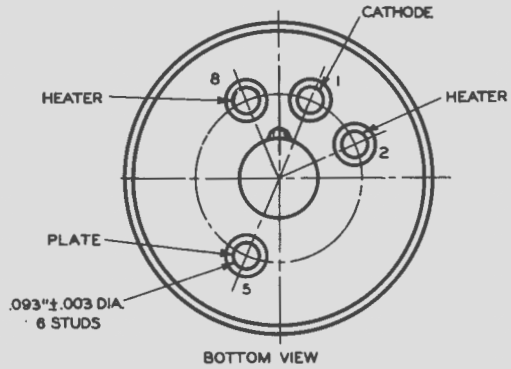

BOTTOM VIEW

INTERMEDIATE OCTAL BASE
SHORT SHELL

FIG. 4

381 A

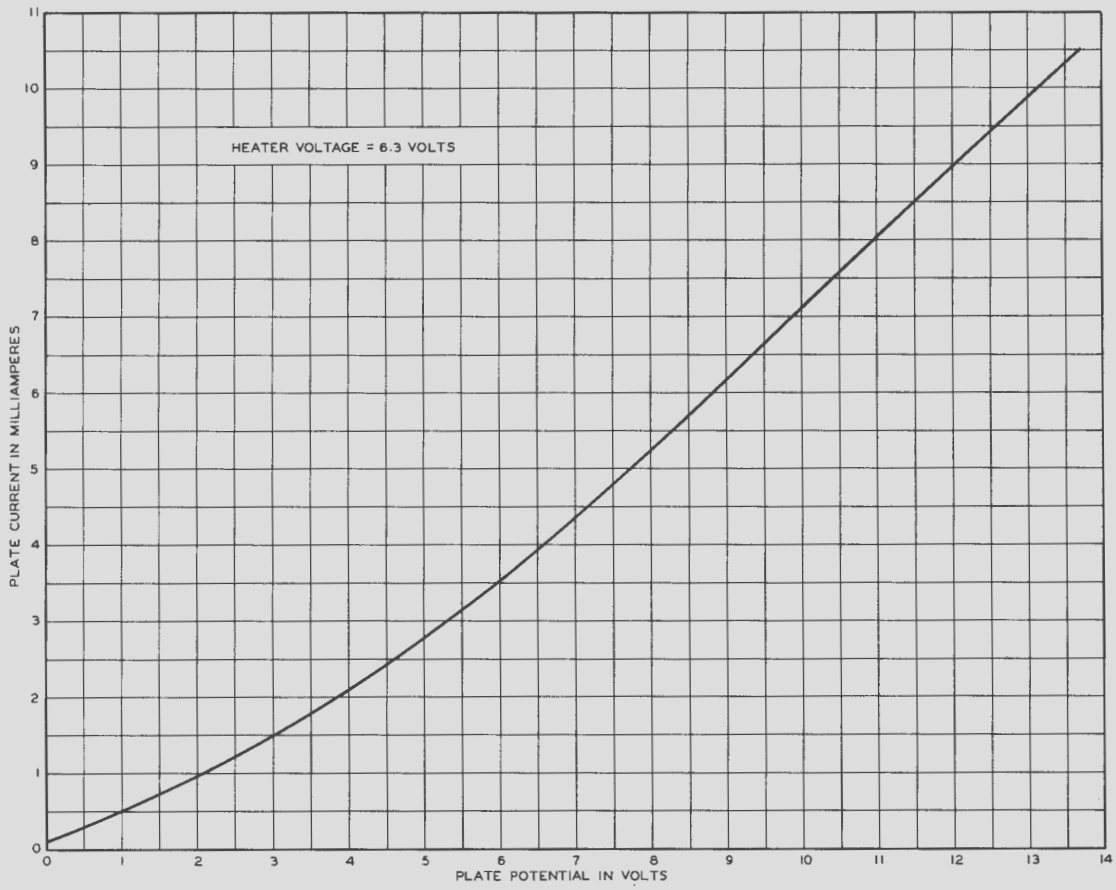

FIG. 5

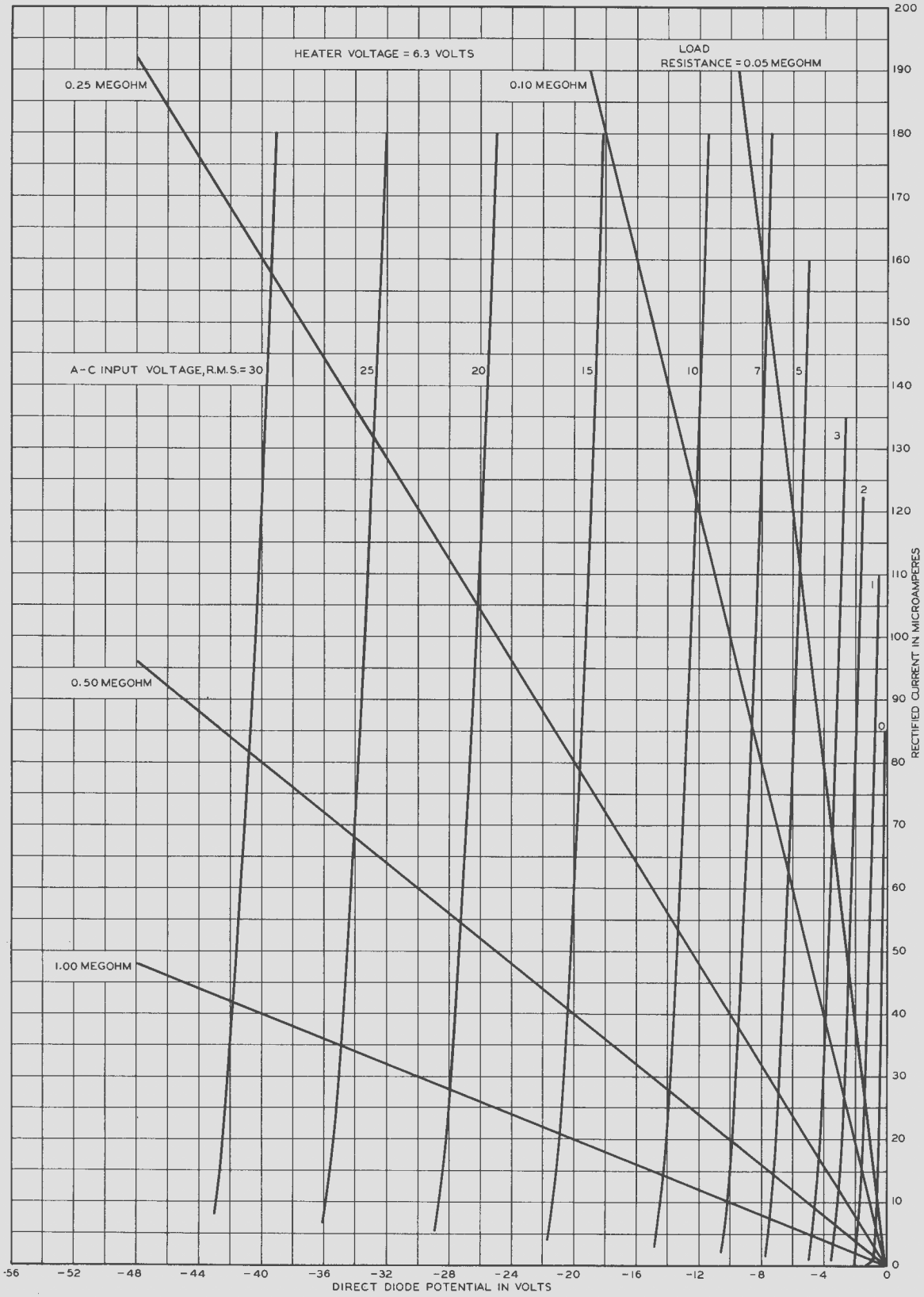
HEATER VOLTAGE = 6.3 VOLTS
LOAD
RESISTANCE = 0.05 MEGOHM
0.25 MEGOHM
0.10 MEGOHM
0.50 MEGOHM
1.00 MEGOHM
A-C INPUT VOLTAGE, R.M.S. = 30
25
20
15
10
7
5
3
2
1
0
RECTIFIED CURRENT IN MICROAMPERES
DIRECT DIODE POTENTIAL IN VOLTS
-56
-52
-48
-44
-40
-36
-32
-28
-24
-20
-16
-12
-8
-4
0
200
190
180
170
160
150
140
130
120
110
100
90
80
70
60
50
40
30
20
10
0

FIG. 6

1-D-41-33C
PRINTED IN U.S.A.

A development of Bell Telephone Laboratories, Incorporated, the research laboratories of the American Telephone and Telegraph Company and the Western Electric Company

V. T. DATA SHEET 380A-381A
ISSUE 1