Western Electric

263B Vacuum Tube

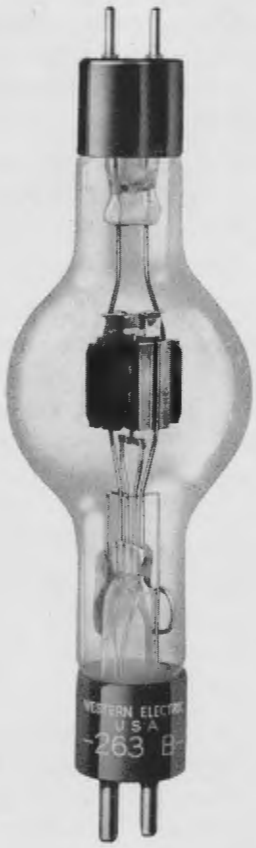

Classification—Full wave, thermionic, mercury vapor rectifier

The 263B vacuum tube is designed to supply direct current from an alternating-current supply.

Dimensions—The dimensions and outline diagrams are given in Figure 1. The overall dimensions are:

Maximum length	10¾″
Maximum diameter	3¼″

Mounting—The 263B is a double-ended vacuum tube employing a two-pin, thrust type base suitable for use in a Western Electric 139A or similar socket. The anode terminals at the top of the bulb are arranged for use with a Western Electric 280A plug or with flexible lead connectors. Since the anode and filament terminals cannot be held in exactly the same plane, rigid mounting connectors should not be used for both sets of terminals.

Base—Dimensions and the arrangement of electrode connections to the base terminals are shown in Figure 1.

Copyright 1936 Western Electric Company, Incorporated

Mounting Positions—The tube should be mounted preferably in a vertical position with the filament terminal end down. If the tube is mounted horizontally, the plane of the anode and filament terminals should also be horizontal. There should be a free circulation of air around the tube. No object should touch the glass bulb.

Filament Rating

Filament voltage	2.5 volts
Nominal filament current	15 amperes

The filament of this tube is designed to operate on a voltage basis from an alternating-current supply. The voltage should be maintained to within 5% of its rated value (2.5 volts). Operation of the filament at a voltage above the upper limit will definitely reduce the life of the tube while a decrease in voltage below the lower limit may cause immediate failure.

Sufficient time must always be allowed for the filament temperature to reach its normal operating value before the anode potential is applied. If filament transformers with good regulation are used, this time is 2 minutes. A period of 10 to 15 minutes should be allowed when the tube is used for the first time or if it has been reinserted in the apparatus after having been removed.

At ambient temperatures below 25 degrees centigrade an extended filament warming time is necessary for the purpose of bringing the mercury vapor pressure to a satisfactory operating value. A curve giving the minimum filament warming time as a function of ambient temperature is shown in Figure 2. Allowing the warming time indicated insures a gas pressure high enough so that the initial starting potential and anode-cathode drop will be below 25 volts. If better regulation is desired while starting up, a longer warming time should be allowed.

Characteristics and Operating Conditions

Approximate anode-cathode potential drop	10 volts
Maximum peak plate current	10 amperes
Maximum peak potential between electrodes	100 volts
Operating ambient temperature range	10 to 50° C.

The curves in Figure 3 give the anode-cathode potential drop with respect to time for a typical 263B vacuum tube. Curve "B" shows the characteristic change which obtains after the recommended two minute filament-heating period. Curve "A" shows a smaller change which obtains if the filament is preheated at least 15 minutes. The exact value varies from tube to tube, with the ambient temperature and during the life of a given tube. Within the specified current and temperature range it may vary from 5 to 25 volts. The starting potential is approximately equal to the anode-cathode drop.

The maximum permissible peak plate current (10 amperes) is a limitation on the instantaneous value that the tube can carry safely in the direction in which it is designed to conduct and should not be exceeded. The maximum rectified load current is not fixed but will depend upon the wave form required by the load and filter circuit.

The maximum permissible peak potential between electrodes (100 volts) is a limitation on the instantaneous value that the tube can stand safely. If it is exceeded, an arc-back may result which will injure the tube. The maximum direct potential available is not fixed but will depend upon the type of circuit used.

263B vacuum tubes may be operated in parallel if some provision is made to insure a proper division of the load current. Current dividing reactors or ballasting resistors in series with each anode, may be used for this purpose. The size of the reactors or resistors depends upon the circuit design.

When operating normally the 263B vacuum tube has a characteristic blue glow. With life the bulb becomes darkened. This change has no harmful effect on the operation of the tube.

In most cases the termination of the useful life of the 263B tube is due to the loss of filament activity. This causes the tube to fail by arcing between the anodes. Failures of this kind should be safeguarded by proper fuse protection to prevent injury to other tubes in the circuit and to the auxiliary equipment.

Typical Rectifier Circuits—The 263B vacuum tube may be used in any standard high vacuum rectifier circuit subject to its current, voltage and temperature limitations. Typical circuits are shown below. The approximate direct output current and voltage for each type of rectifier circuit where tubes are operated at maximum permissible plate current and inverse voltage are given in Table 1. The values listed below are average values of the pulsating current and voltage for an unfiltered circuit.

Table 1

Circuit Designation	Phase Supply	Number of Tubes	Load Potential in Volts	Load Current in Amperes
A	1	1	25	6
B	1	2	25	12
C	1	2	50	6
D	3	3	40	15
E	3	3	30	15

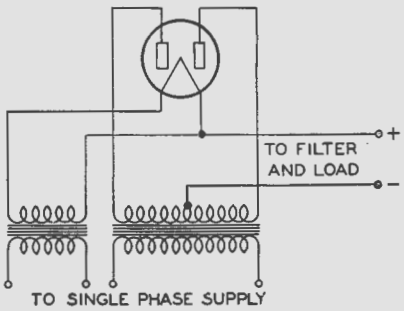

TO SINGLE PHASE SUPPLY
CIRCUIT A
SINGLE PHASE, DOUBLE-HALF-WAVE

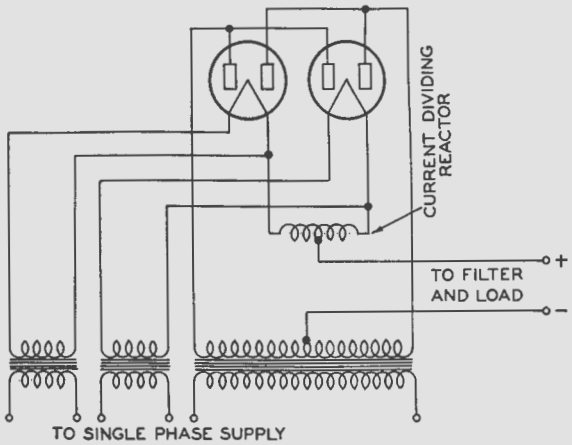

TO SINGLE PHASE SUPPLY
CIRCUIT B
SINGLE PHASE DOUBLE-HALF-WAVE IN PARALLEL

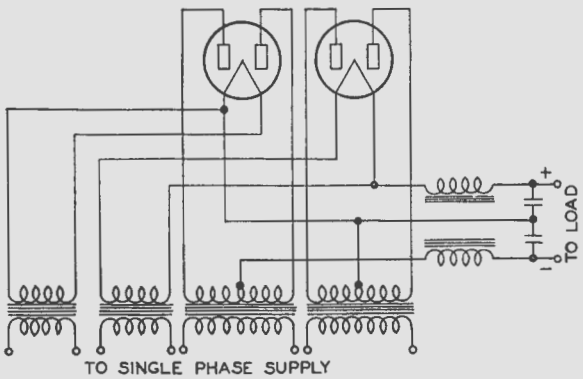

TO SINGLE PHASE SUPPLY
CIRCUIT C
SINGLE PHASE DOUBLE-HALF-WAVE TWO TUBE
SERIES CIRCUIT

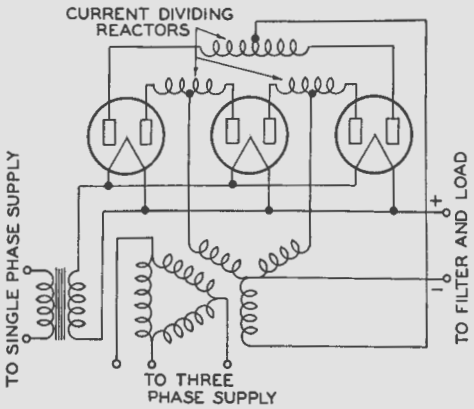

TO THREE
PHASE SUPPLY
CIRCUIT D
THREE PHASE "Y" CIRCUIT

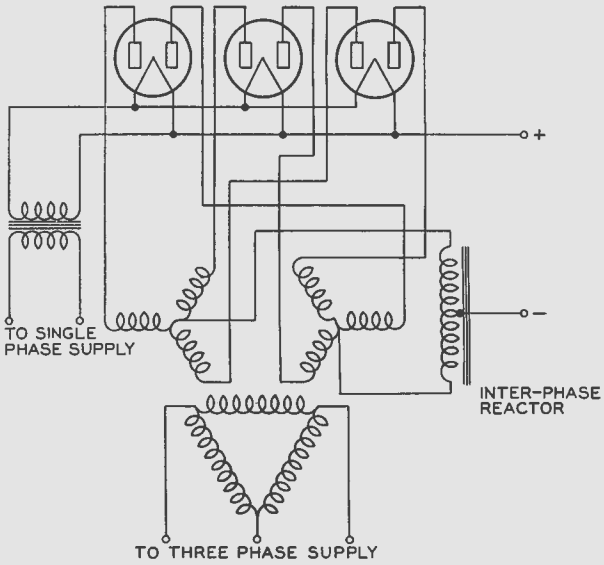

CIRCUIT E
THREE PHASE, DOUBLE "Y" INTERCONNECTED

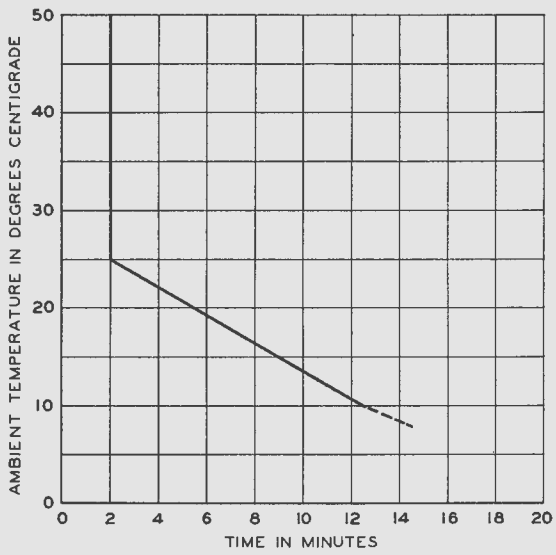

FIG. 2

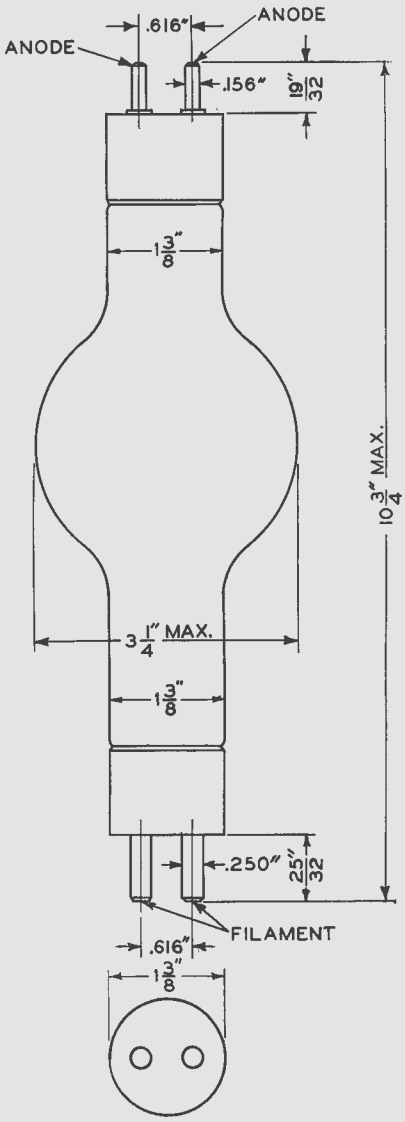

FIG. 1

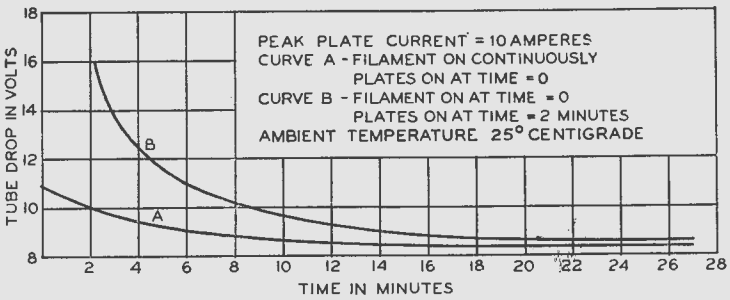

FIG. 3

1-C-36-53C
PRINTED IN U.S.A.

A development of Bell Telephone Laboratories, Incorporated, the research laboratories of the American Telephone and Telegraph Company, and the Western Electric Company

V. T. DATA SHEET 263B
ISSUE 1