Western Electric

364A Vacuum Tube

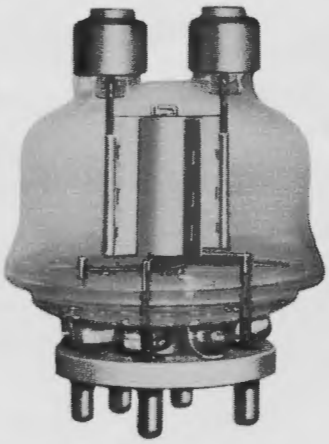

Classification—Filamentary, air-cooled, high mu, triode

Applications—This tube is developed especially for use at the higher radio frequencies. As a radio-frequency oscillator or power amplifier it may be used at full rating at frequencies up to 150 megacycles and at reduced rating up to 300 megacycles. It is also very suitable for use at audio frequencies, particularly in Class B audio amplifiers or modulators where it may be used without grid bias with plate potentials as high as 800 volts.

The electrodes are supported entirely by their short and heavy leads directly from the hard glass envelope. The elimination of the conventional stem allows the reduction to a minimum of the overall dimensions, which together with the high amplification factor makes the tube ideal for use as an amplifier at ultra high frequencies.

Double plate and grid leads allow separate connections for power and neutralizing circuits, and in addition reduce the series impedance in the grid and plate circuits of the tube. All leads are shorter than those in the 356A tube.

Dimensions and Connections—Figure 1 shows the dimensions, outline diagram and arrangement of the electrode connections. The overall dimensions are:

Maximum overall length	3⅜″
Maximum diameter	2⅝″

Mounting—This tube is provided with a special large five terminal wafer type base for use in A5A or A5B Western Electric or similar sockets. The filament, grid and filament center tap terminals are connected to the base. The plate terminals are at the top of the envelope. The tube must always be mounted with the axis of the filament vertical, either in the upright or inverted positions.

Filament—Thoriated tungsten

Filament voltage	5.0 volts, a.c. or d.c.
Nominal filament current	5.0 amperes
Average thermionic emission	1.0 ampere

Characteristics—Performance data given below are based upon a typical set of conditions. Variations can be expected with different circuits and tubes.

Average Characteristics with a plate current of 100 milliamperes

Amplification factor	50
Grid to plate transconductance	4500 micromhos
Plate resistance	11000 ohms

Average Direct Interelectrode Capacitances

Plate to grid	2.75 $\mu\mu f$
Plate to filament	0.8 $\mu\mu f$
Grid to filament	3.0 $\mu\mu f$

Operation

Maximum Ratings

Max. direct plate voltage	1500 volts
Max. direct plate current	120 milliamperes
Max. plate dissipation	50 watts
Max. r-f grid current	6 amperes
Max. direct grid current	35 milliamperes
Max. frequency for above ratings	125 megacycles
Max. plate voltage for upper frequency limit of 300 Mc	1000 volts

Class B Audio Amplifier or Modulator for balanced 2-tube circuit

Direct plate voltage	1500	1250	1000	750 volts
Grid bias	−18.5	−11.5	−3	0
Direct plate current per tube,				
No drive	30	35	50	45 milliamperes
Maximum drive	100	120	120	120 milliamperes
Load resistance per tube	4100	2750	2100	1450 ohms
Load resistance plate to plate	16,400	11,000	8400	5800 ohms
Power output depends on distortion requirements				
Approximate Maximum Output (per pair of tubes)	200	200	150	100 watts
Recommended power for driving stage	10	10	10	10 watts

Class B Radio-Frequency Amplifier

Direct plate voltage	1500	1250	1000	750 volts
Grid bias	−17.5	−10	−3	0 volts
Direct plate current for carrier conditions	50	60	60	60 milliamperes
Approximate carrier watts for use with 100% modulation	25	25	20	15 watts

Class C Radio-Frequency Oscillator or Power Amplifier—Unmodulated

Direct plate voltage	1500	1250	1000 volts
Direct plate current	100	120	120 milliamperes
Grid bias	−40 to −80	−35 to −75	−30 to −60 volts
Nominal power output	100	100	80 watts

Class C Radio-Frequency Oscillator or Amplifier—Plate Modulated

Direct plate voltage	1250 max.	1000	750 volts
Grid bias	−100	−95	−90
Direct plate current	100	100	100 milliamperes
Max. direct grid current	35	35	35 milliamperes
Nominal carrier power output for use with 100% modulation	85	65	50 watts

Ultra High Frequency Operation

For frequencies above 150 megacycles, the maximum plate voltage must be reduced as follows:

Frequency	150	200	250	300 megacycles
Plate voltage:				
Class B or Class C Unmodulated	1500	1400	1250	1000 volts
Class C Plate Modulated	1250	1175	1050	800 volts

The plate dissipation should not be allowed to exceed 50 watts.

Operating Precautions

Mechanical—The tubes should not be subjected to mechanical shock or excessive vibration. Mechanical vibration may cause breakage of the thoriated tungsten filaments.

A free circulation of air must be provided to insure adequate cooling of the glass during operation. Since dimensions have been reduced to a minimum in the interest of ultra-high frequency circuit convenience it is necessary that adequate cooling be insured, particularly if several tubes are mounted in a confined space. Air streams must be directed at the plate and grid terminals and connectors provided of such construction as to aid in cooling the terminals.

Electrical—Overload protection should always be provided for the plate circuit. A suitable fuse or circuit breaker should remove the plate voltage if the plate current exceeds 175 milliamperes per tube. Although the tube is sufficiently rugged to withstand momentary overloads, a prolonged overload caused by inefficient adjustment of the circuit, may damage the tube. When adjusting a new circuit, reduced plate voltage or a series resistance of 1000 to 5000 ohms in the plate circuit should be used until it is operating properly.

The filament should always be operated at the rated voltage, measured at the tube terminals. A 5% decrease in filament voltage reduces the thermionic emission approximately 25%. Either direct or alternating current may be used for heating the filament. If direct current is used, the plate and grid circuit returns should be connected to the negative filament terminal. If alternating current is used, the circuit returns should be connected to the center tap of the filament heating transformer winding or the center tap of the filament.

In cases where severe and prolonged overload has temporarily impaired the electronic emission of the filament, the activity may be restored by operating the filament, with the plate and grid voltages off, 30% above normal voltage for 10 minutes followed by a longer period at normal voltage.

Audio Amplifier or Modulator

Class B—Grid bias practically at cut-off and grid driving voltage higher than the bias.

In a Class B audio-frequency power amplifier or modulator two 364A tubes may be used in a balanced circuit, a driving stage capable of about 10 watts output is required, and an input transformer with good regulation must be used so that the grid current drawn during positive grid swings does not produce appreciable distortion. The output transformer must transform the load impedance to the proper value. The power output obtainable will be determined by the quality of the transformer used and the amount of distortion which can be tolerated. The grid bias must be held constant and therefore cannot be obtained by grid leak or series resistor methods. A battery or other source having good regulation is necessary.

The power required of a modulator for complete modulation of a Class C amplifier is one-half the direct power input to the plates of the Class C amplifier.

Radio-Frequency Oscillator or Power Amplifier

Class B—Radio-Frequency Amplifier

The Class B radio-frequency amplifier is used to amplify a modulated radio-frequency carrier wave without appreciable distortion. It operates similarly to the Class B audio amplifier except that only a single tube need be used, the tuned output circuit serving to preserve the wave shape. The push-pull circuit, however, eliminates the even order harmonics and thus increases the efficiency slightly.

Class C—Radio-Frequency Oscillator or Power Amplifier—Grid Bias Below Cut-Off

Unmodulated

This type of operation is suitable for telegraphy, or the production of a continuous flow of radio-frequency power for purposes other than communication. The grid bias may be provided by means of a grid leak resistor or cathode resistor.

Plate Modulated

This type of operation is for use when the modulating voltage is superimposed on the plate supply voltage and to obtain good quality the output power should vary as the square of the plate voltage. For complete or 100% modulation, the plate potential varies from zero to twice the applied direct value during a cycle of the audio frequency. With no modulation applied, the plate potential is, of course, the direct value and the carrier power output is one-fourth of the peak power output under 100% modulation. The grid bias should be provided by a combination of fixed bias and grid leak resistor.

Ultra High Frequency Operation

The 364A tube is particularly suited for use in the frequency range from 30 to 300 megacycles.

The tubes may be used at full rating up to 150 megacycles. For higher frequencies, dielectric losses, and lead-in heating due to charging currents are greatly increased and therefore the plate voltage must be reduced as indicated in the table. The plate dissipation should not be allowed to exceed 50 watts.

When the tube is used at frequencies about 50 megacycles special attention must be paid to the cooling mentioned under mechanical operating precautions.

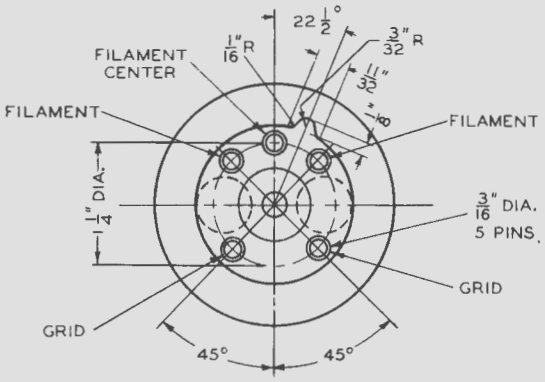

FIG. 1

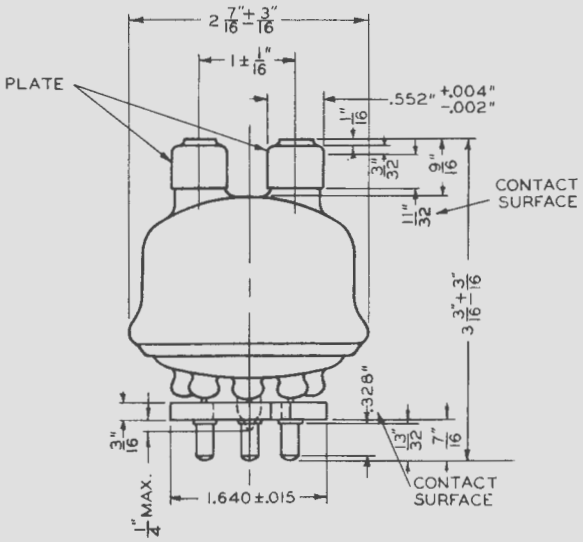

FIG. 1

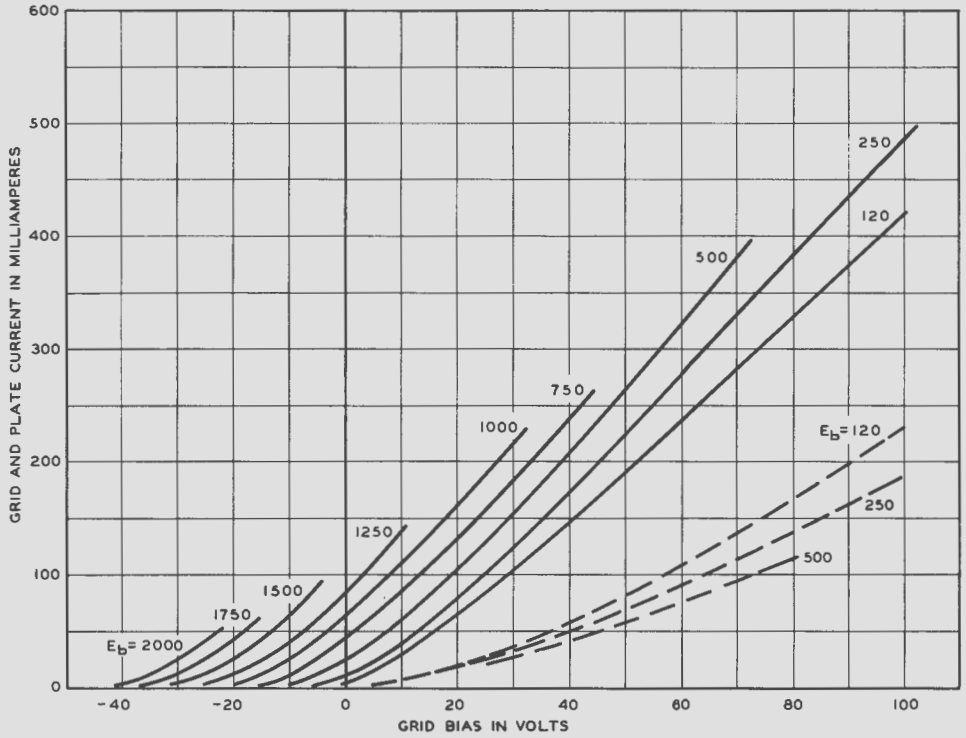

FIG. 2

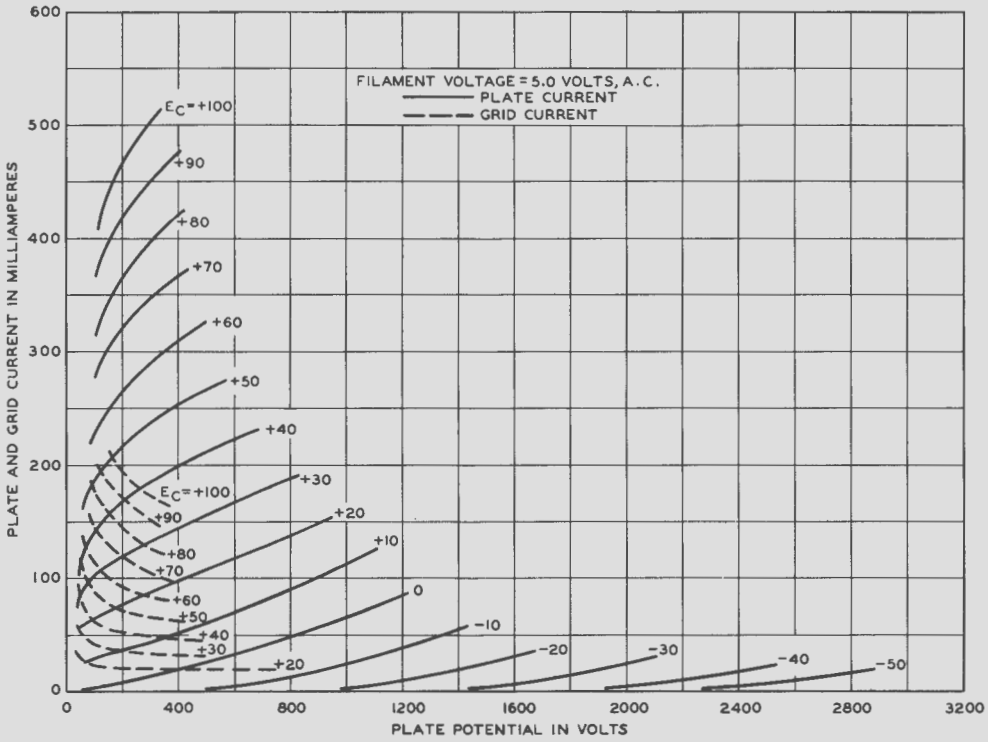

FIG. 3

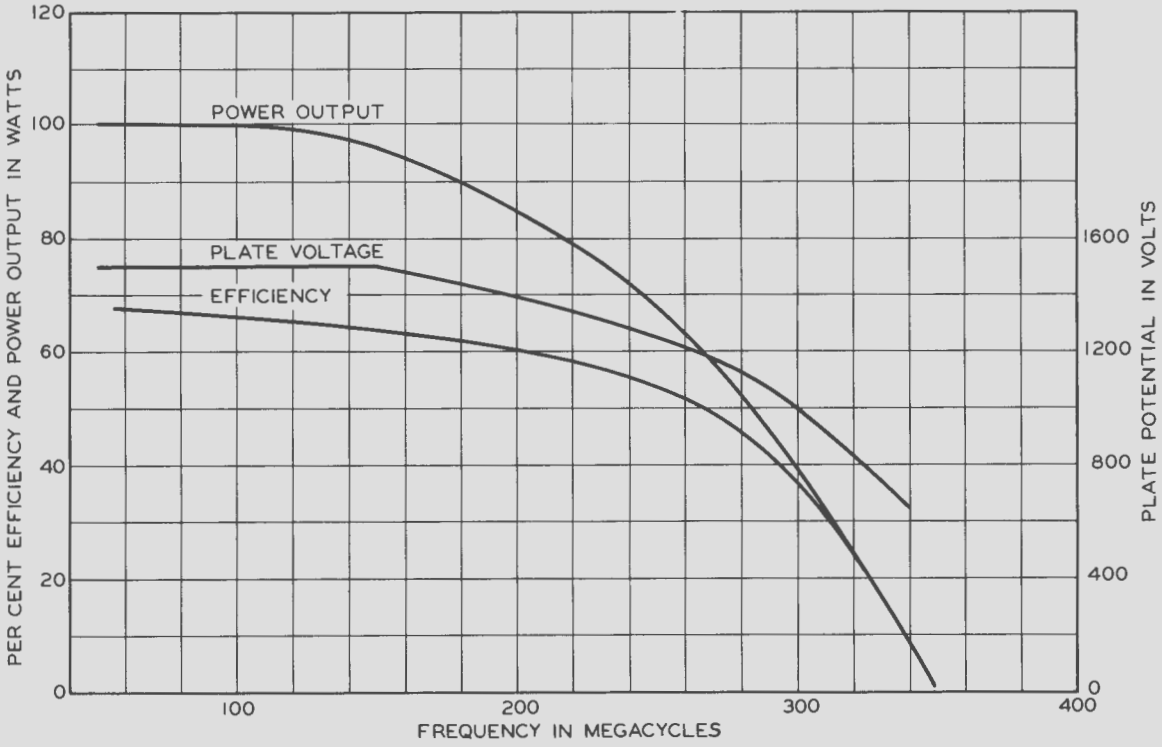

FIG. 4

1-D-41-33-C
PRINTED IN U.S.A.

A development of Bell Telephone Laboratories, Incorporated, the research laboratories of the American Telephone and Telegraph Company, and the Western Electric Company

V. T. DATA SHEET 364A
ISSUE 1