Western Electric

Vacuum Tubes

Three Element Power Thyratrons

287A 323A 354A 355A

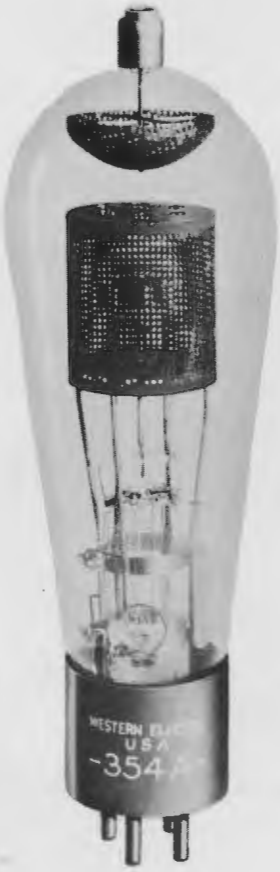

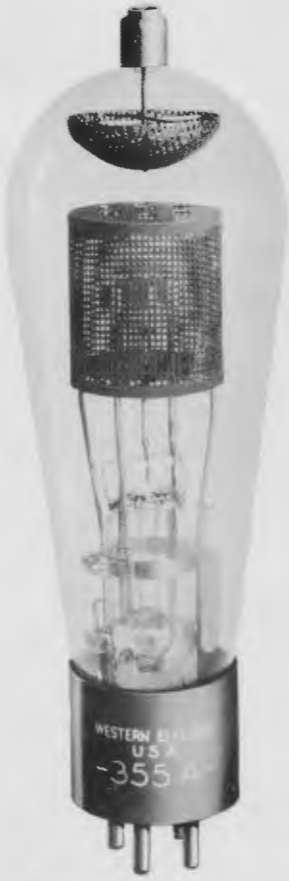

NOTE:

This combined bulletin supersedes data sheets previously issued for the individual tubes.

Copyright, 1941, Western Electric Company, Incorporated

Classification

These tubes are half-wave, thermionic, three element, negative grid, medium power thyratrons designed to operate at frequencies below 150 cycles. They are primarily intended for use in regulated rectifier, inverter, relay or other applications requiring thyratron characteristics.

Mounting

The tubes should be mounted as indicated on each individual tube data sheet. Free air circulation should be provided.

Filament

The filaments are designed to operate from alternating current sources. The voltage should be maintained to within 5% of the rated value. Operation of the filaments at a voltage above the upper limit will definitely reduce the life of the tubes, while a decrease in voltage below the lower limit may cause immediate failure.

Operating Precautions

Sufficient filament heating time must always be allowed for the filaments to reach a satisfactory operating temperature and for deposits of mercury in the upper parts of the tubes to be evaporated before the anode potential is applied. The "Required Heating Time" specified on the individual tube data sheet is sufficient to bring the filament to a satisfactory operating temperature when filament circuits with good regulation are used. At the low ambient temperatures, tubes containing mercury vapor only may require several minutes filament warming before the tube will start conducting. In most applications the tubes are self protecting during this warming period. A filament heating period of 15 minutes or more should be allowed when the tubes are used for the first time or if they have been subjected to extensive handling or prolonged standing.

Tube Voltage Drop

The tube voltage drop is substantially independent of anode current. The exact value varies, but under the specified operating conditions will normally be between 5 and 25 volts. A curve showing the tube voltage drop as a function of condensed mercury temperature for a typical tube when passing rated average anode current is shown on the individual tube data sheet.

Maximum Anode Current

The maximum permissible instantaneous and average anode current ratings are limitations on the current values that the tubes can safely carry in the direction in which they are designed to conduct and should not be exceeded.

Maximum Time of Averaging Anode Current

This time is the maximum period over which the anode current should be averaged when determining the maximum average anode current.

Maximum Peak Voltage Between Anode and Grid

This is the maximum permissible instantaneous voltage that should be applied between anode and grid or between anode and filament; either as an inverse anode voltage or a forward anode voltage blocked by grid action.

Control Characteristic

These tubes are so designed that for any given positive anode potential there is a critical grid potential. If the grid is held more negative than this value and the tube is not conducting, the anode current will remain zero. If it is made less negative, the tube becomes conducting and the anode current assumes a value determined by the applied potential and the impedance in the anode circuit. When the tube is conducting the Tube Voltage Drop is practically independent of the value of both the grid potential and the anode current. To extinguish the discharge and reestablish control by the grid, the anode potential must be reduced to zero or made negative, for a period at least as long as the deionization time.

The control characteristic curve relating the critical grid potential to the anode potential for a typical tube is shown on each individual tube data sheet. This characteristic may vary from tube to tube and during the life of a given tube. The extreme variation during the normal life of the tube when operating within the recommended limits will fall within the shaded area. The axis "A" should be used if the anode and grid circuit returns are made to the mid-tap of the filament transformer, and the axis "B" if they are made to either end. Return to the mid-tap is the more desirable mode of operation.

The control characteristic, of tubes containing mercury vapor only, shifts appreciably in a positive direction as the condensed mercury vapor temperature is reduced below 30° C. This shift is indicated by the dotted curve.

In some applications the starting of the anode current may be affected by extraneous electrostatic or electromagnetic fields causing ionization within the tube or inducing a voltage in a high impedance grid circuit. In such cases proper shielding will be required.

Maximum Instantaneous Grid Current

The maximum instantaneous grid current is the maximum peak current from the grid to the external circuit and should not be exceeded.

It is generally necessary to provide a means for limiting the grid current, as a conducting path is also established between the grid and filament within the tube when the anode current is flowing. The grid will supply a net positive ion or electron current to the external circuit depending upon the magnitude and polarity of the applied grid voltage.

Maximum Condensed Mercury Temperature Range

This operating temperature range applies to the temperature of the bulb at the area where the free mercury condenses during normal operation. For mercury and inert gas mixture tubes this range should not be exceeded. For tubes containing mercury vapor only, the upper limit should not be exceeded, but it is permissible to apply plate voltage at condensed mercury temperatures between the lower operating limit and zero degrees centigrade. Full output may not be obtained however until the temperature approaches the rated lower limit. (See "Operating Precautions.")

Nominal Deionization Time

The nominal deionization time is the approximate time required for the gas to return to a deionized state after the removal of a positive anode potential. The grid does not regain control until the gas is deionized.

Typical Circuits

These tubes may be used in a variety of circuits where thyratron control characteristics are desired. The following circuits are examples:

Figure 1 shows an application as a relay device. This circuit possesses a "lock in" feature since the anode potential must be removed momentarily in order to restore the tube to the non-conducting condition.

Figure 2 shows a half-wave manually-controlled rectifier. The average load current may be controlled by varying the relative phase relation of the grid and anode potentials by means of the phase shifting network.

Figure 3 shows an inverter circuit for the conversion of direct current to alternating current. The frequency and wave form of the a-c output will be determined by the driving frequency and the circuit constants.

Figure 4 shows a grid-controlled rectifier circuit which has the property of providing a load voltage nearly independent of load current. The magnitude of the load voltage may be adjusted by means of the potentiometer from 10% to full voltage. While a single section filter is shown, additional sections may be added if desired.

Figure 5 shows a grid-controlled rectifier circuit in which the load current may be limited to a predetermined value even under short circuit conditions. Additional filter sections may be added if desired.

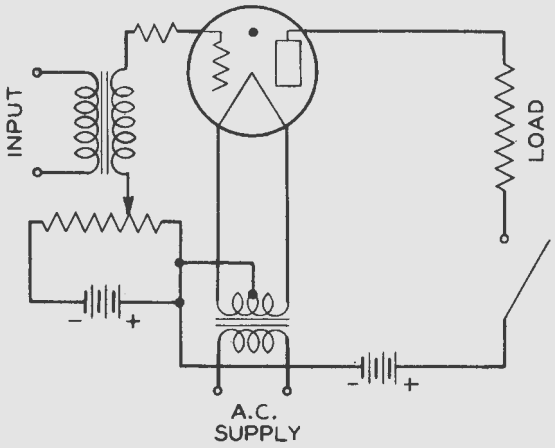

FIG. 1

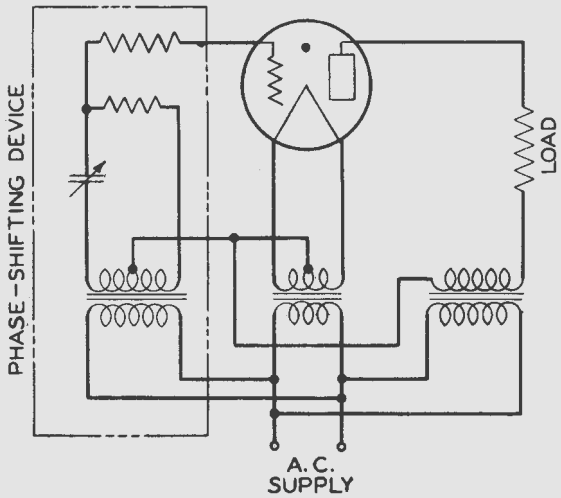

FIG. 2

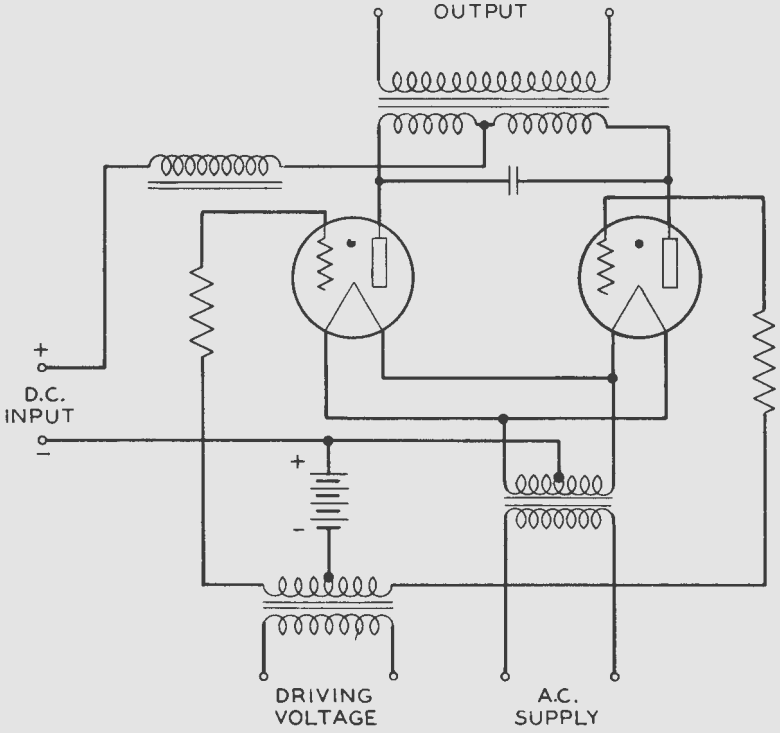

FIG. 3

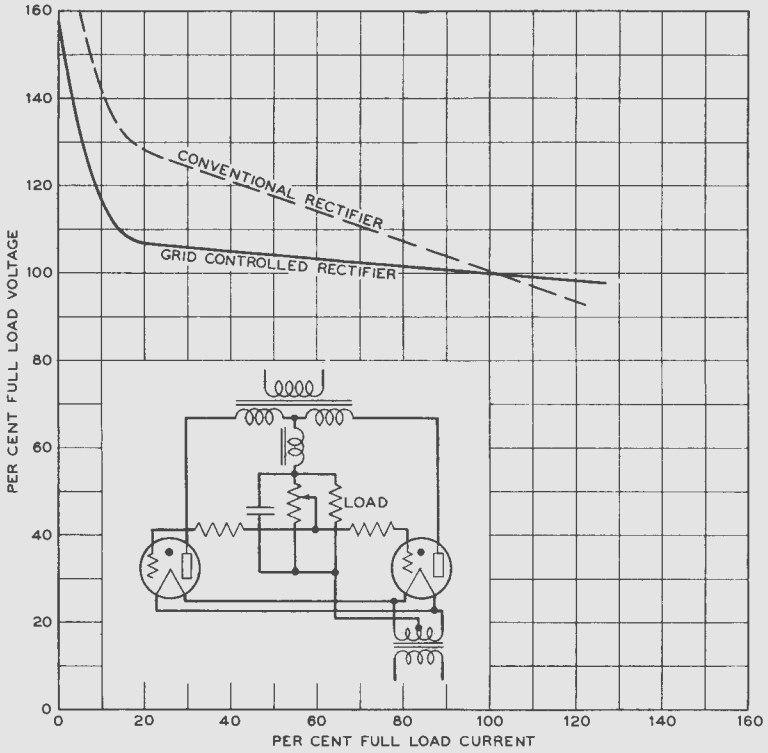
160
140
120
100
80
60
40
20
0
PER CENT FULL LOAD VOLTAGE
CONVENTIONAL RECTIFIER
GRID CONTROLLED RECTIFIER
LOAD
0
20
40
60
80
100
120
140
160
PER CENT FULL LOAD CURRENT

FIG. 4

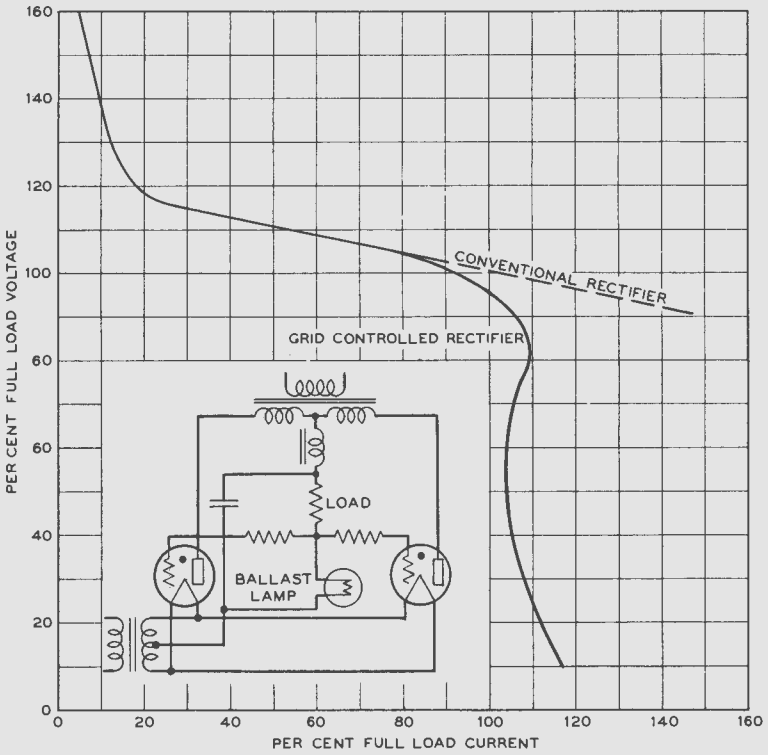
160
140
120
100
60
60
40
20
0
PER CENT FULL LOAD VOLTAGE
CONVENTIONAL RECTIFIER
GRID CONTROLLED RECTIFIER
LOAD
BALLAST
LAMP
0
20
40
60
80
100
120
140
160
PER CENT FULL LOAD CURRENT

FIG. 5

287A Vacuum Tube
Mercury Vapor Filled

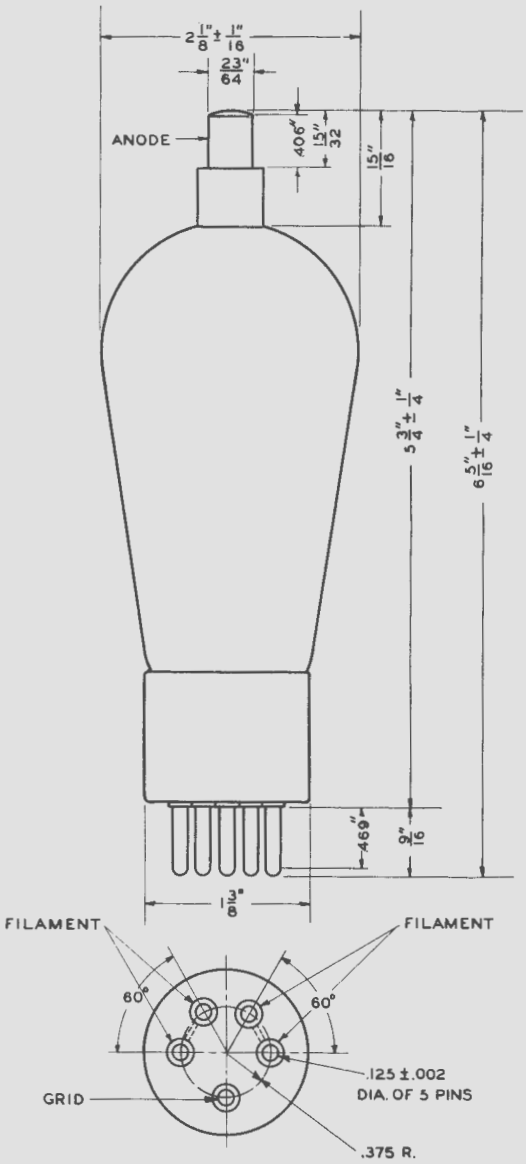

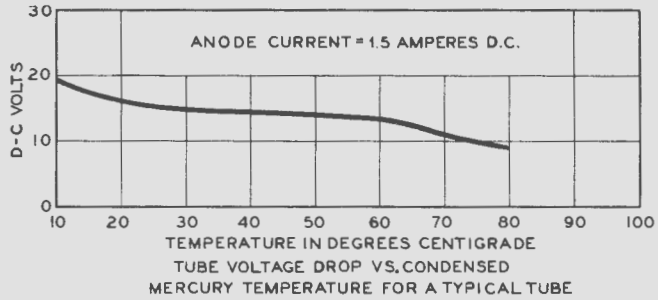

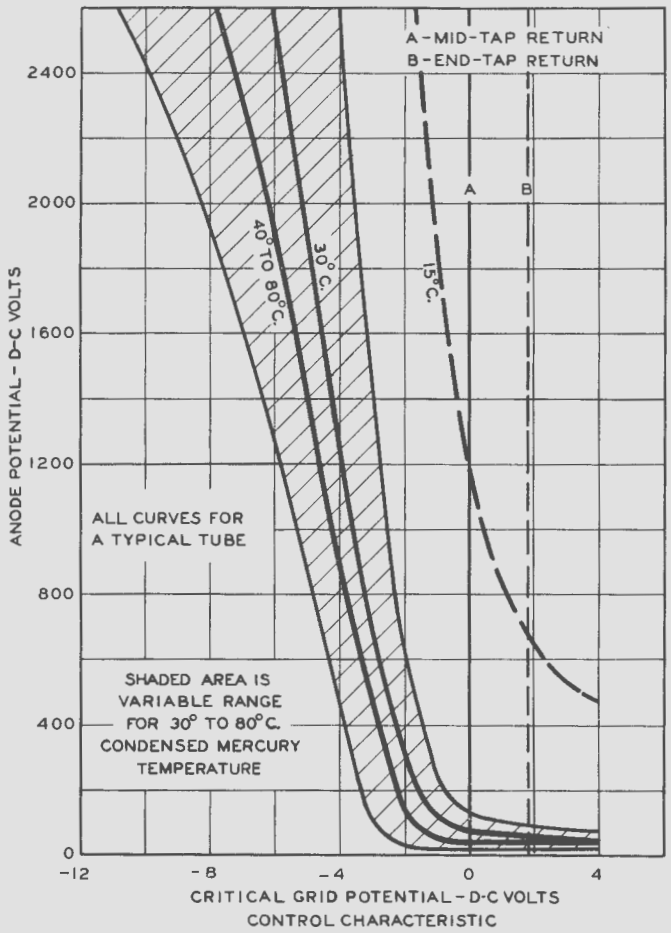

Ratings

Filament		
Voltage	2.5 volts a.c.	
Nominal current	7.0 amperes	
Required heating time	10 seconds	
Approximate tube voltage drop	15 volts	
Maximum peak voltage between anode and grid—volts	500	2500
Maximum instantaneous anode current—amperes	6.0	2.5
Maximum average anode current—amperes	1.5	0.64
Maximum time of averaging anode current	5 seconds	
Maximum instantaneous grid current	50 milliamperes	
Operating condensed mercury temperature range	+30 to +80° C.	
Nominal deionization time	1000 microseconds	

Mounting—The 287A tube requires a W. E. 141A or similar socket. A spring clip anode terminal connector is required. Mount in a vertical position only—base end down. A clearance of at least 2 inches should be allowed between the bulb and any adjacent object.

323A Vacuum Tube
Mercury Vapor and Argon Filled

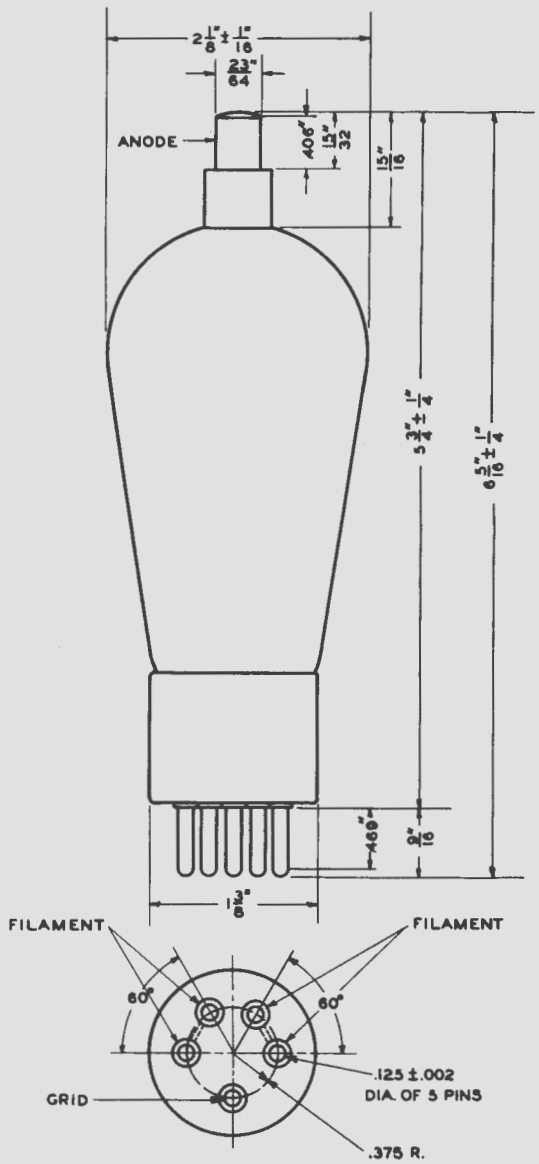

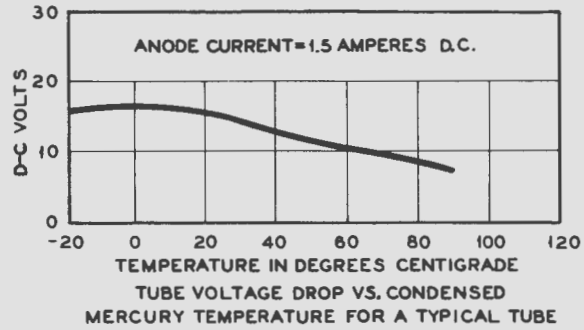

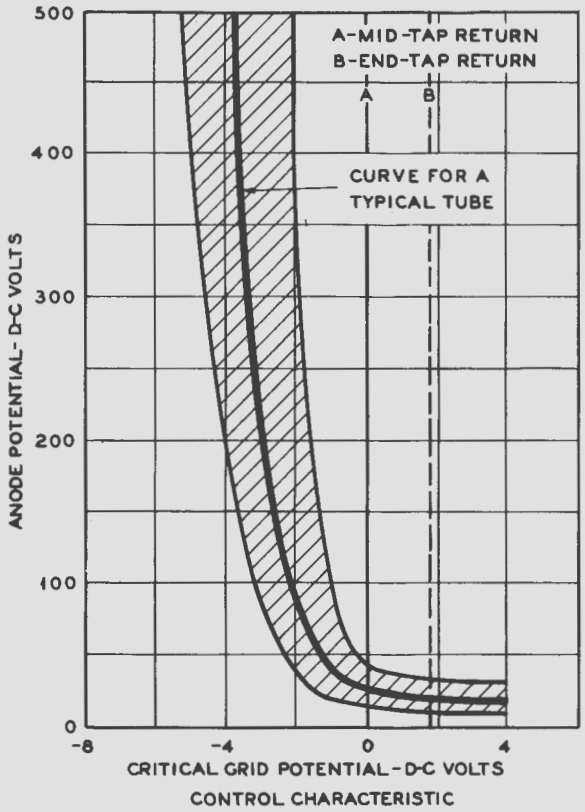

Ratings

Filament	
Voltage	2.5 volts a.c.
Nominal current	7.0 amperes
Required heating time	10 seconds
Approximate tube voltage drop	15 volts
Maximum peak voltage between anode and grid	500 volts
Maximum instantaneous anode current	6.0 amperes
Maximum average anode current	1.5 amperes
Maximum time of averaging anode current	5 seconds
Maximum instantaneous grid current	50 milliamperes
Operating condensed mercury temperature range	−20 to +90° C.
Nominal deionization time	1000 microseconds

Mounting—The 323A tube requires a W. E. 141A or similar socket. A spring clip anode terminal connector is required. Mount in a vertical position only—base end down. A clearance of at least 2 inches should be allowed between the bulb and any adjacent object.

354A Vacuum Tube
Mercury Vapor Filled

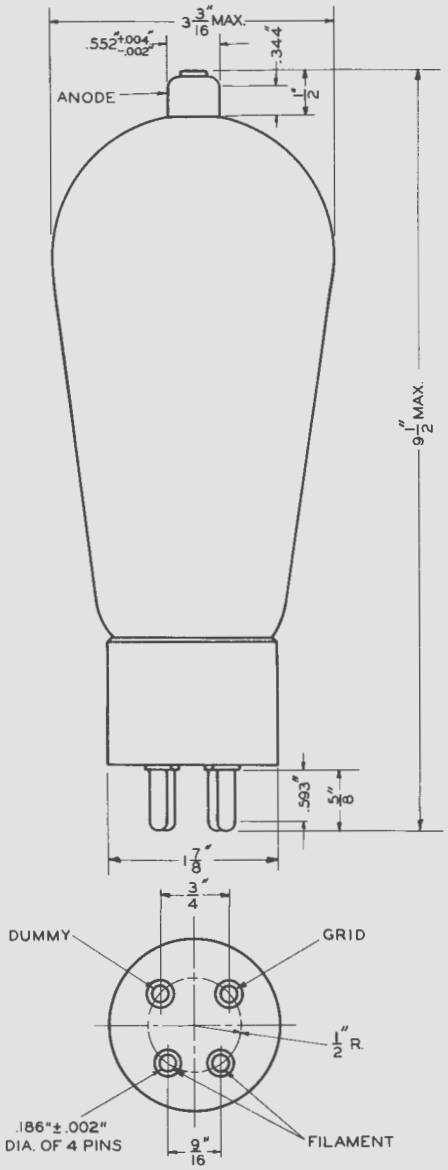

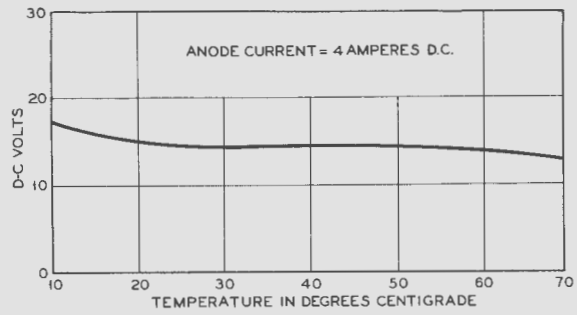

TUBE VOLTAGE DROP VS. CONDENSED MERCURY TEMPERATURE FOR A TYPICAL TUBE

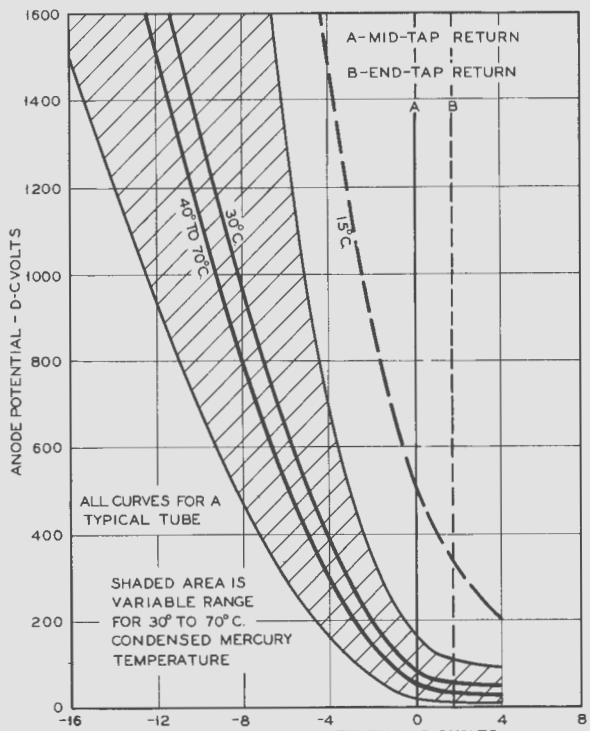

CONTROL CHARACTERISTIC

Ratings

Filament	
Voltage	2.5 volts a.c.
Nominal current	16 amperes
Required heating time	45 seconds
Approximate tube voltage drop	15 volts
Maximum peak voltage between anode and grid	1500 volts
Maximum instantaneous anode current	16 amperes
Maximum average anode current	4 amperes
Maximum time of averaging anode current	15 seconds
Maximum instantaneous grid current	50 milliamperes
Operating condensed mercury temperature range	+30 to +70° C.
Nominal deionization time	1000 microseconds

Mounting—The 354A tube requires a Westinghouse S#793202 or similar socket. A spring clip anode terminal connector is required. Mount in a vertical position only—base end down. A clearance of at least 2 inches should be allowed between the bulb and any adjacent object.

355A Vacuum Tube
Mercury Vapor and Argon Filled

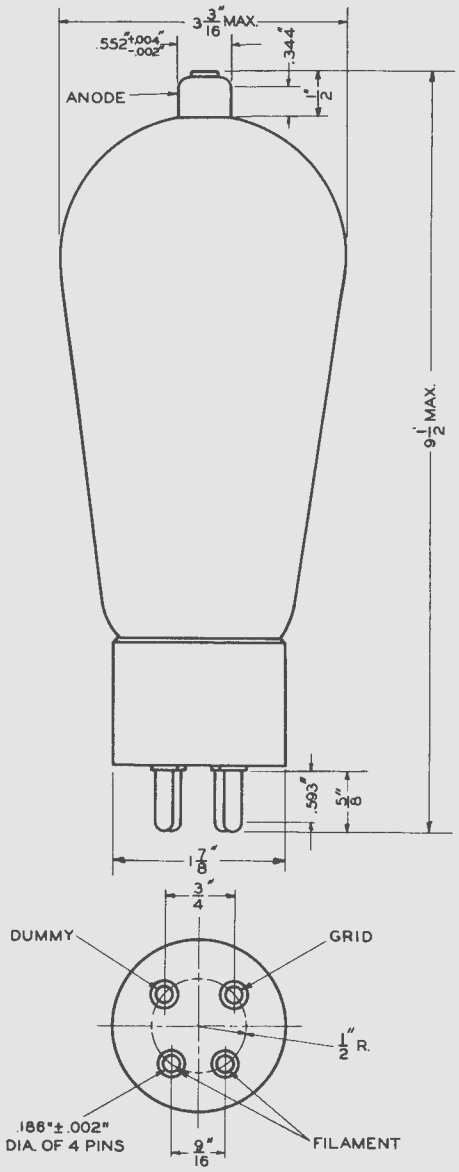

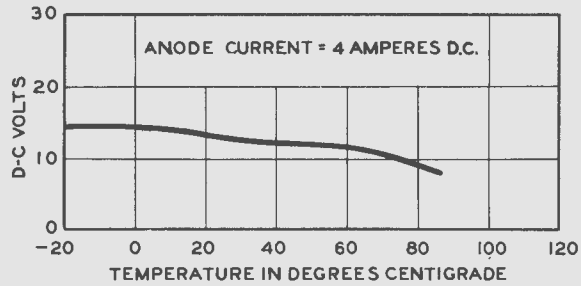

TUBE VOLTAGE DROP VS. CONDENSED MERCURY TEMPERATURE FOR A TYPICAL TUBE

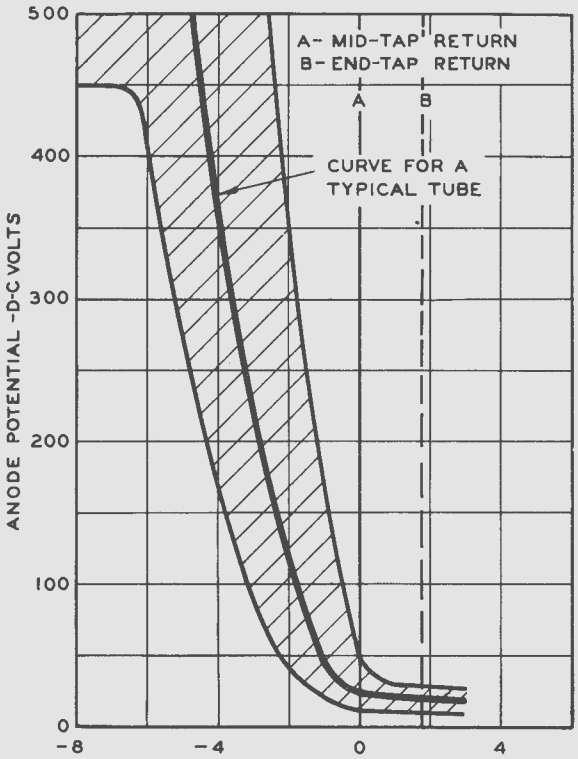

CONTROL CHARACTERISTIC

Ratings

Filament	
Voltage	2.5 volts a.c.
Nominal current	16 amperes
Required heating time	45 seconds
Approximate tube voltage drop	15 volts
Maximum peak voltage between anode and grid	350 volts
Maximum instantaneous anode current	16 amperes
Maximum average anode current	4 amperes
Maximum time of averaging anode current	15 seconds
Maximum instantaneous grid current	50 milliamperes
Operating condensed mercury temperature range	−20 to +80° C.
Nominal deionization time	1000microseconds

Mounting—The 355A tube requires a Westinghouse S#793202 or similar socket. A spring clip anode terminal connector is required. Mount in a vertical position only—base end down. A clearance of at least 2 inches should be allowed between the bulb and any adjacent object.

Western Electric

2-G-45-5C
PRINTED IN U.S.A.

A development of Bell Telephone Laboratories, Incorporated, the research laboratories of the American Telephone and Telegraph Company, and the Western Electric Company

V. T. DATA SHEET
287A 323A
354A 355A
ISSUE 1