Western Electric

101J Vacuum Tube

Classification—Low-power filamentary triode

The 101J tube is similar in characteristics to the 101F, but is contained in a pear-shaped bulb and has higher insulation between elements.

Applications

Modulator and demodulator in carrier systems.

Voice-frequency and carrier-frequency amplifier for telephone repeater equipment and other applications where small power outputs are required.

Dimensions—Dimensions, outline diagrams of the tube and base, and the arrangement of the electrode connections to the base terminals are shown in Figures 1 and 2.

Base—Four-pin, bayonet type, having special contact metal at the ends of the contact pins.

Socket—Four-contact, bayonet-slot type, preferably provided with contact-metal contacts, such as the Western Electric 100L for front of panel mounting or 100R for rear of panel mounting.

Mounting Positions—Either vertical or horizontal. If mounted in a horizontal position, the plane of the filament, which is indicated in Figure 2, should be vertical.

Copyright 1936 Western Electric Company, Incorporated

Average Direct Interelectrode Capacitances

	A	B	C
Grid to plate, $\mu\mu f$	6.5	6.1	6.2
Grid to filament, $\mu\mu f$	4.2	4.9	5.3
Plate to filament, $\mu\mu f$	1.7	3.7	4.1

Column A—Based tube without socket.

Column B—Tube alone when measured in 100L socket mounted on metal plate; socket and mounting plate connected to filament.

Column C—Tube alone when measured in 100R socket mounted in metal plate; socket and mounting plate connected to filament.

Filament Rating

Filament current	0.50 ampere, d.c.
Nominal filament voltage	4.15 volts

The filament of this tube is designed to operate on a current basis and should be operated at a current not appreciably exceeding the rated value.

Characteristics and Operating Conditions—Plate-current characteristics of a typical 101J tube are shown in Figure 3 as functions of grid bias. Permissible operating grid and plate voltages are included within the area ABCD. The grid and plate voltages are measured to the negative end of the filament. Corresponding amplification-factor, plate-resistance, and transconductance characteristics are given in Figures 4, 5, and 6, respectively. Plate-current characteristics are given as functions of plate voltage in Figure 7.

A number of recommended and maximum operating conditions and the corresponding values of amplification factor and plate resistance are given in the table on page 3. Recommended conditions or others of no greater severity should be selected in preference to maximum conditions wherever possible. The life of the tube at maximum operating conditions may be shorter than at the recommended conditions.

Power Output and Distortion—The fundamental power output in milliwatts, and the second and third harmonic levels in db below the fundamental, corresponding to the recommended and maximum operating conditions, are given in the latter part of the table for values of load resistance, R, both equal to and double the value of the plate resistance, r_p. The peak value of the sinusoidal input voltage, E_{gm}, which gives the indicated power output, P_m, and harmonic levels, F_{2m} and F_{3m}, in each case, is numerically equal to the grid bias. For a smaller input voltage, E_g, the approximate levels may be computed from the following relations:

$$P = P_m \left(\frac{E_g}{E_{gm}}\right)^2$$

$$F_2 = F_{2m} + 20 \log_{10} \frac{E_{gm}}{E_g}$$

$$F_3 = F_{3m} + 40 \log_{10} \frac{E_{gm}}{E_g}$$

Microphonic Noise—With a plate voltage of 130 volts, a grid bias of −8 volts, and a load resistance of 100,000 ohms, the mean microphonic noise output level of the 101J tube, measured in a laboratory reference test set, is 26 db below 1 volt. The range of levels of individual tubes extends from 14 to 34 db below 1 volt. Since microphonic noise output depends on the type and intensity of the mechanical disturbance which produces it, the values given here are useful chiefly for comparison with the levels of other types of tubes which have been tested in the same way.

Table

						OUTPUT					
						$R = r_p$			$R = 2r_p$		
	Plate Voltage	Grid Bias	Plate Current	Amplification Factor	Plate Resistance	Power Output	Second Harmonic	Third Harmonic	Power Output	Second Harmonic	Third Harmonic
	Volts	Volts	Milliamperes		Ohms	Milliwatts	db	db	Milliwatts	db	db
Recommended	100	−4	6.3	6.6	5,750	16	32	55	14	38	65
Operating	130	−10	4.8	6.5	6,500	80	22	36	75	28	46
Conditions	130	−8	7.0	6.5	5,600	62	26	46	55	33	55
	130	−4	11.9	6.6	4,800	20	37	60	18	43	65
	160	−14	5.4	6.5	6,500	170	20	32	160	26	42
	160	−10	10.0	6.6	5,000	120	28	47	110	34	55
Maximum	190	−18	6.2	6.5	6,100	275	17	29	255	24	37
Operating	190	−16	8.4	6.5	5,450	270	22	35	250	28	45
Conditions	190	−14	10.9	6.6	5,000	250	25	43	215	31	50

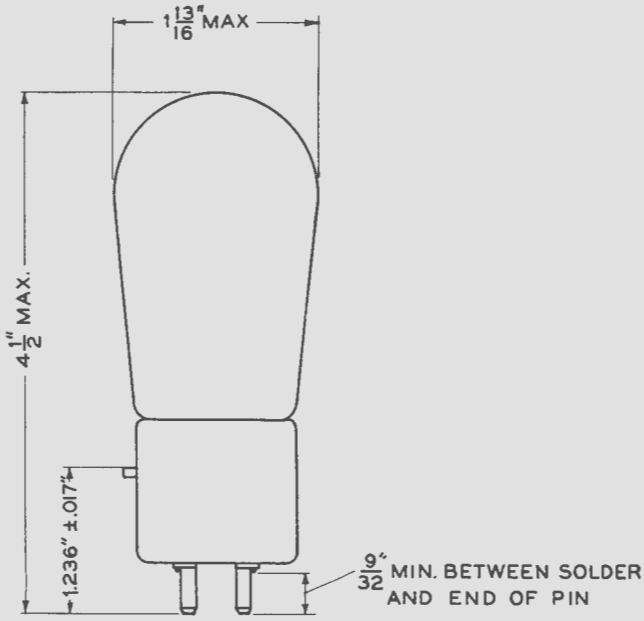

FIG. 1

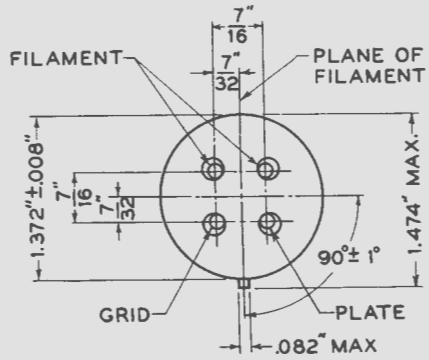

FIG. 2

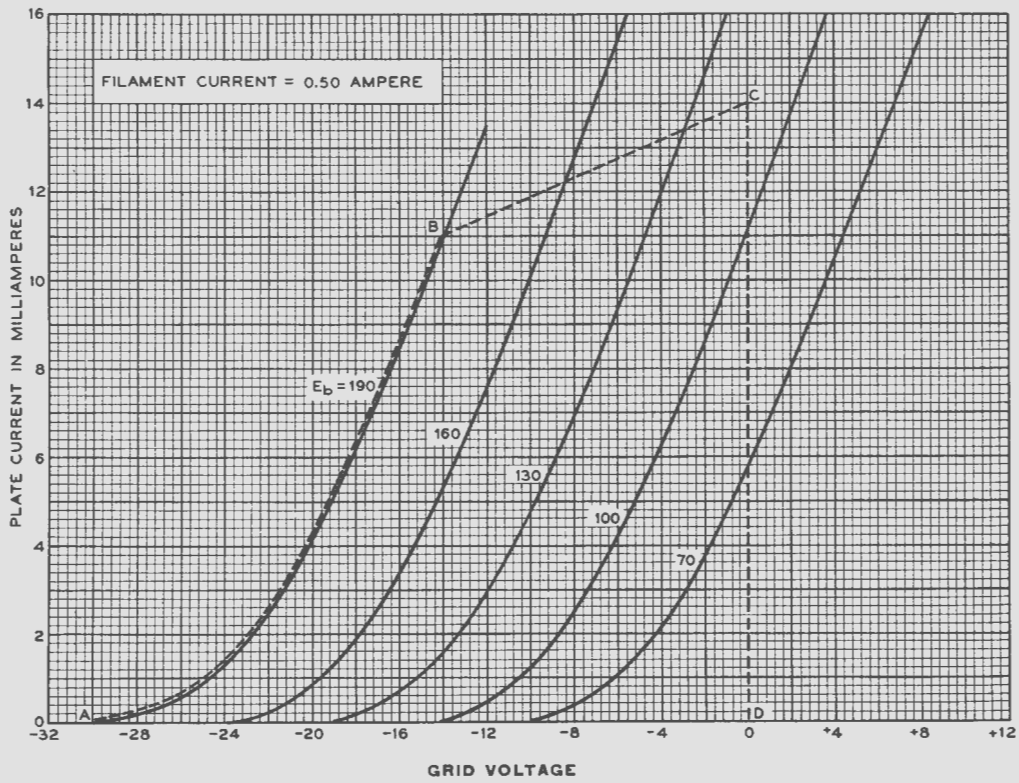

FIG. 3

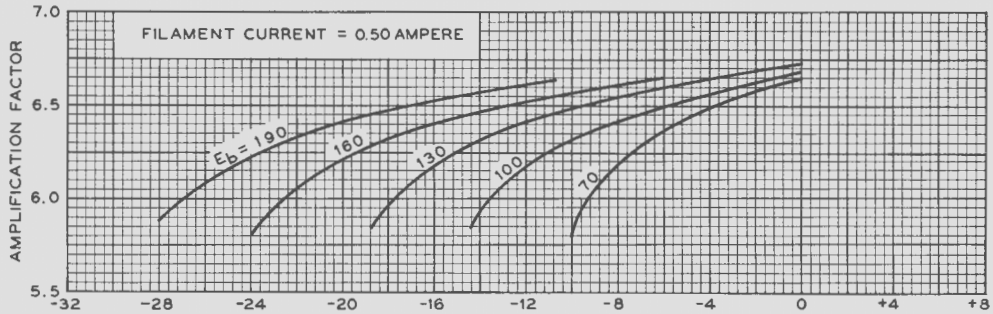

FIG. 4

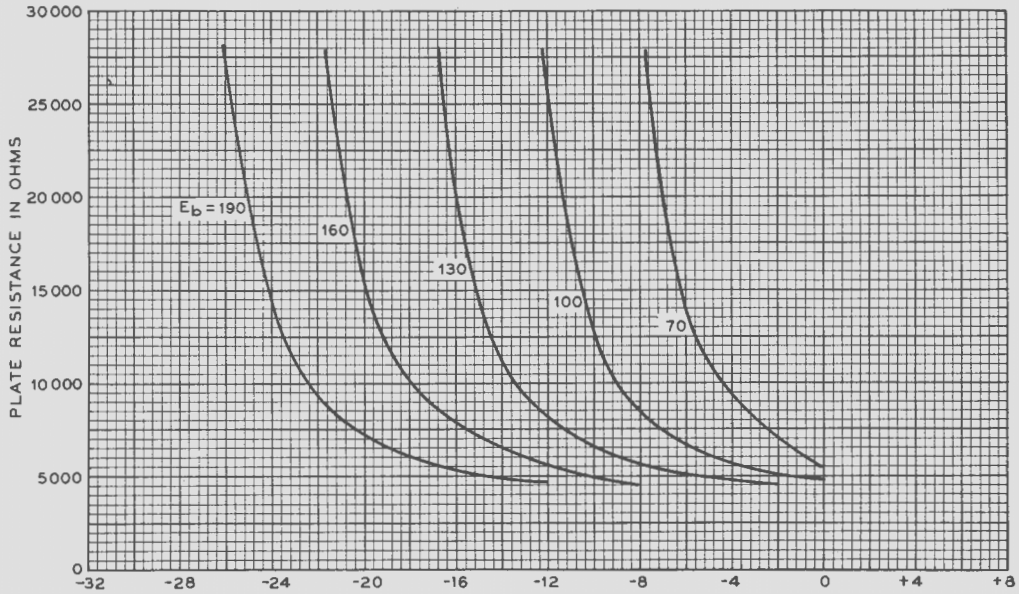

FIG. 5

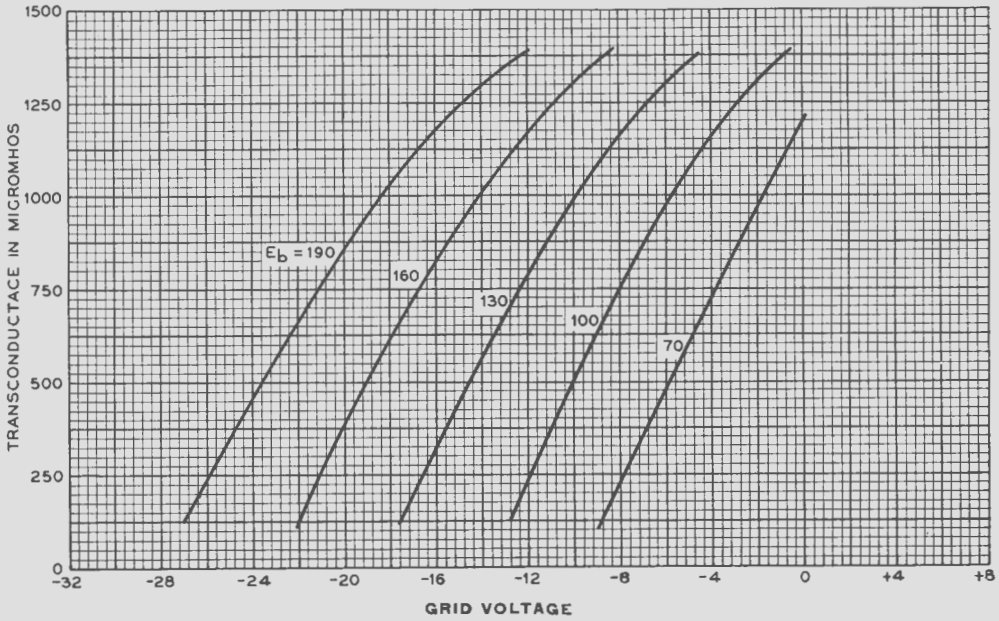

FIG. 6

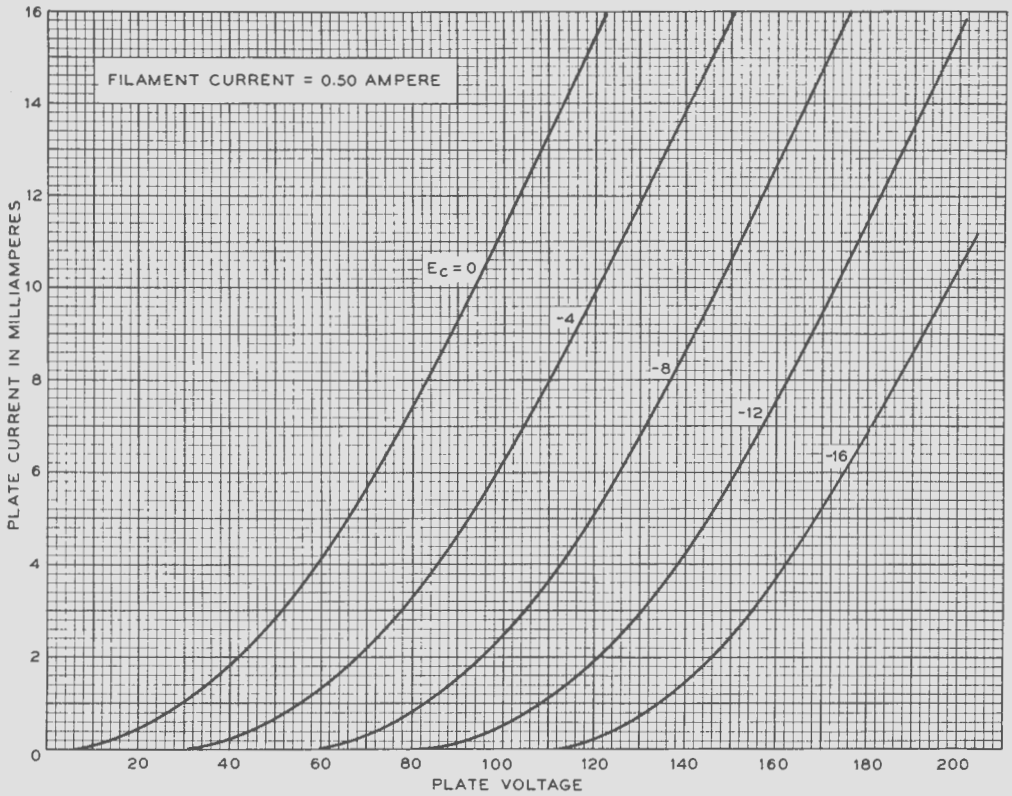
FILAMENT CURRENT = 0.50 AMPERE
$E_c = 0$
-4
-8
-12
-16
PLATE CURRENT IN MILLIAMPERES
PLATE VOLTAGE
0
2
4
6
8
10
12
14
16
20
40
60
80
100
120
140
160
180
200

FIG. 7