Western Electric

246A Vacuum Tube

Classification—Voltage-amplifier, filamentary, screen-grid tetrode

An important feature of the 246A tube is its low filament power consumption.

Applications

Carrier and radio-frequency voltage amplifier

Detector

Audio-frequency voltage amplifier

Dimensions—Dimensions, outline diagrams of the tube and base, and the arrangement of the electrode connections to the base terminals are shown in Figures 1 and 2.

Base—Medium, four-pin thrust type with bayonet pin. Small, metal cap control-grid terminal at the top of the bulb.

Socket—Standard, four-contact type, such as the Western Electric 143B socket.

Mounting Positions—The 246A tube may be mounted in any position.

Copyright 1936 Western Electric Company, Incorporated

Average Direct Interelectrode Capacitances

	A	B
Control grid to plate	0.020	0.010 μμf
Control grid to filament and screen grid	4.0	5.2 μμf
Plate to filament and screen grid	8.3	8.8 μμf

Column A—Without shield.

Column B—With close-fitting metal shield connected to filament.

Filament Rating

Filament current	0.100 ampere, d.c.
Nominal filament voltage	3.3 volts

The filament of this tube is designed to operate on a current basis and should be operated at as near the rated current as is practicable.

Characteristics—Plate current and screen-grid current characteristics of a typical 246A tube are shown as functions of plate voltage for several values of control-grid voltage in Figures 3 and 4 for screen-grid voltages of 45 and 67.5 volts, respectively. The plate, screen-grid, and control-grid voltages are measured from the negative end of the filament. Plate current, screen-grid current, and transconductance characteristics are given in Figures 5, 6 and 7, respectively, as functions of control-grid voltage for the same two values of screen-grid voltage and three values of plate voltage. Corresponding amplification factor and plate resistance characteristics are given in Figures 8, 9, 10 and 11.

Typical Operating Conditions

Plate Voltage	Screen-Grid Voltage	Control-Grid Bias	Plate Current	Screen-Grid Current	Amplification Factor	Plate Resistance	Transconductance
Volts	Volts	Volts	Milliamperes	Milliamperes		Ohms	Micromhos
135	45.0	−1.5	1.50	0.20	285	725000	390
*135	67.5	−3.0	2.85	0.30	165	325000	510
*180	45.0	−1.5	1.55	0.15	335	820000	410

*Maximum operating conditions.

Circuit Requirements—Screen-grid tubes are particularly well suited for use in high-frequency amplifiers and are capable of developing comparatively high gain per stage. In order to avoid undesired feed-back in the circuit, it is usually necessary to observe the following precautions: (1) use of a close-fitting shield around each tube, (2) shielding of each stage of the amplifier circuit, (3) use of a low-impedance condenser between the screen grid and filament of each tube, (4) filtering of each battery lead to each tube, and (5) minimization of impedances common to the plate, screen-grid, control-grid, or filament circuits of two or more tubes.

The screen-grid voltage should be obtained either directly from a low-resistance source or from a voltage divider. The use of a series resistance to reduce a high voltage supply to the desired value is not recommended because screen-grid currents differ widely in different tubes and vary during life in individual tubes.

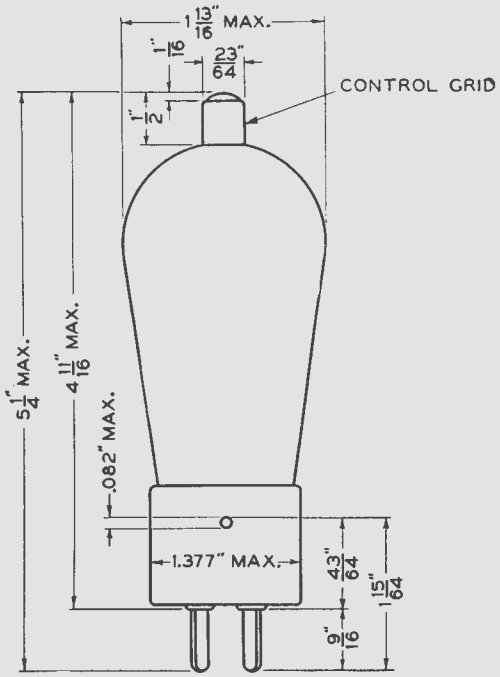
1 13/16" MAX.
1/16"
23/64"
CONTROL GRID
1/2"
5 1/4" MAX.
4 11/16" MAX.
.082" MAX.
1.377" MAX.
43/64"
1 15/64"
9/16"

FIG. 1

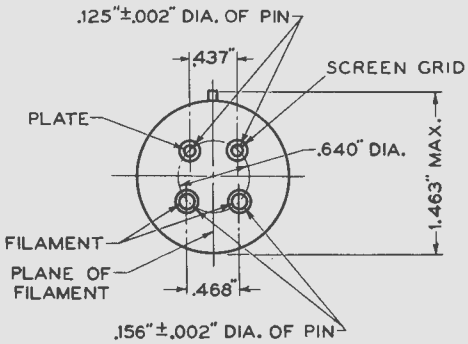
.125"±.002" DIA. OF PIN
.437"
SCREEN GRID
PLATE
.640" DIA.
1.463" MAX.
FILAMENT
PLANE OF FILAMENT
.468"
.156"±.002" DIA. OF PIN

FIG. 2

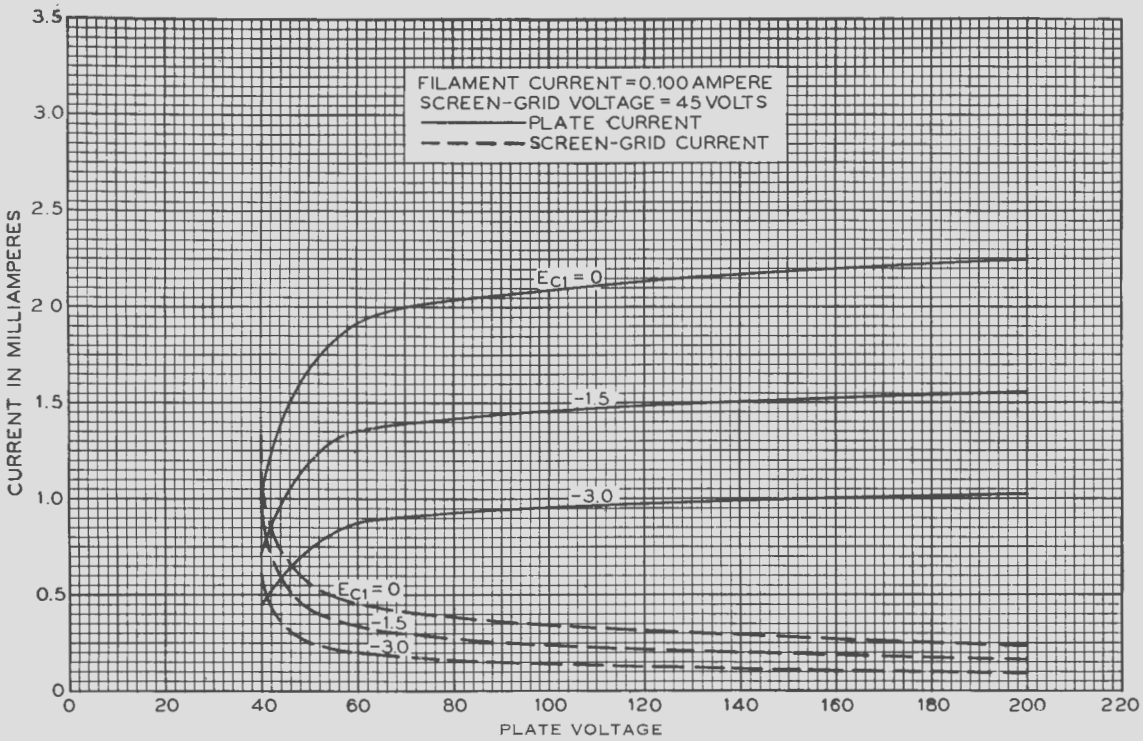
FILAMENT CURRENT = 0.100 AMPERE
SCREEN-GRID VOLTAGE = 45 VOLTS
PLATE CURRENT
SCREEN-GRID CURRENT
$E_{C1} = 0$
-1.5
-3.0
$E_{C1} = 0$
-1.5
-3.0
CURRENT IN MILLIAMPERES
PLATE VOLTAGE
0
0.5
1.0
1.5
2.0
2.5
3.0
3.5
0
20
40
60
80
100
120
140
160
180
200
220

FIG. 3

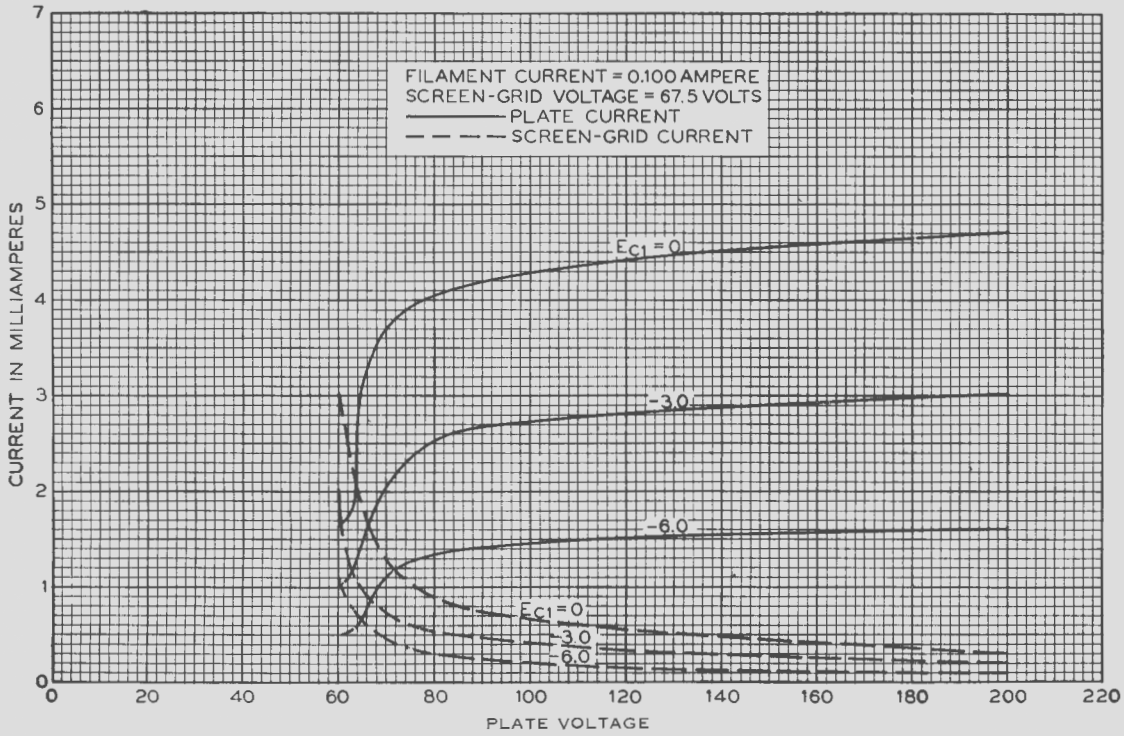
FILAMENT CURRENT = 0.100 AMPERE
SCREEN-GRID VOLTAGE = 67.5 VOLTS
PLATE CURRENT
SCREEN-GRID CURRENT
$E_{C1} = 0$
-3.0
-6.0
$E_{C1} = 0$
-3.0
-6.0
CURRENT IN MILLIAMPERES
PLATE VOLTAGE
0
1
2
3
4
5
6
7
0
20
40
60
80
100
120
140
160
180
200
220

FIG. 4

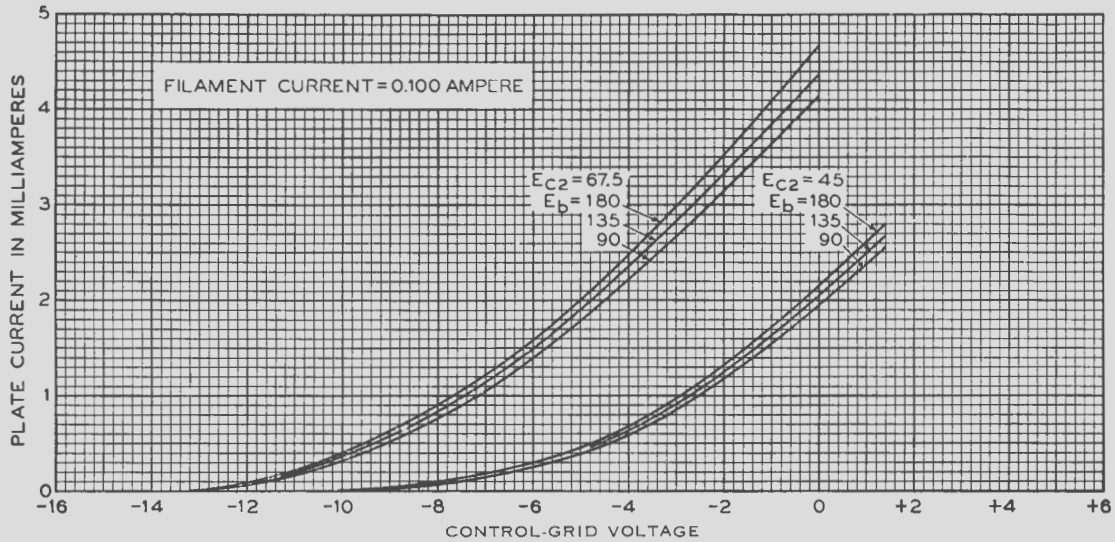

FIG. 5

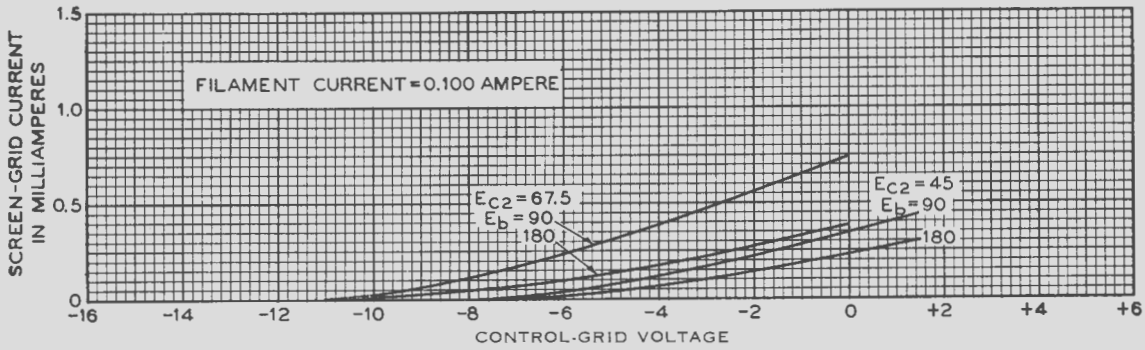

FIG. 6

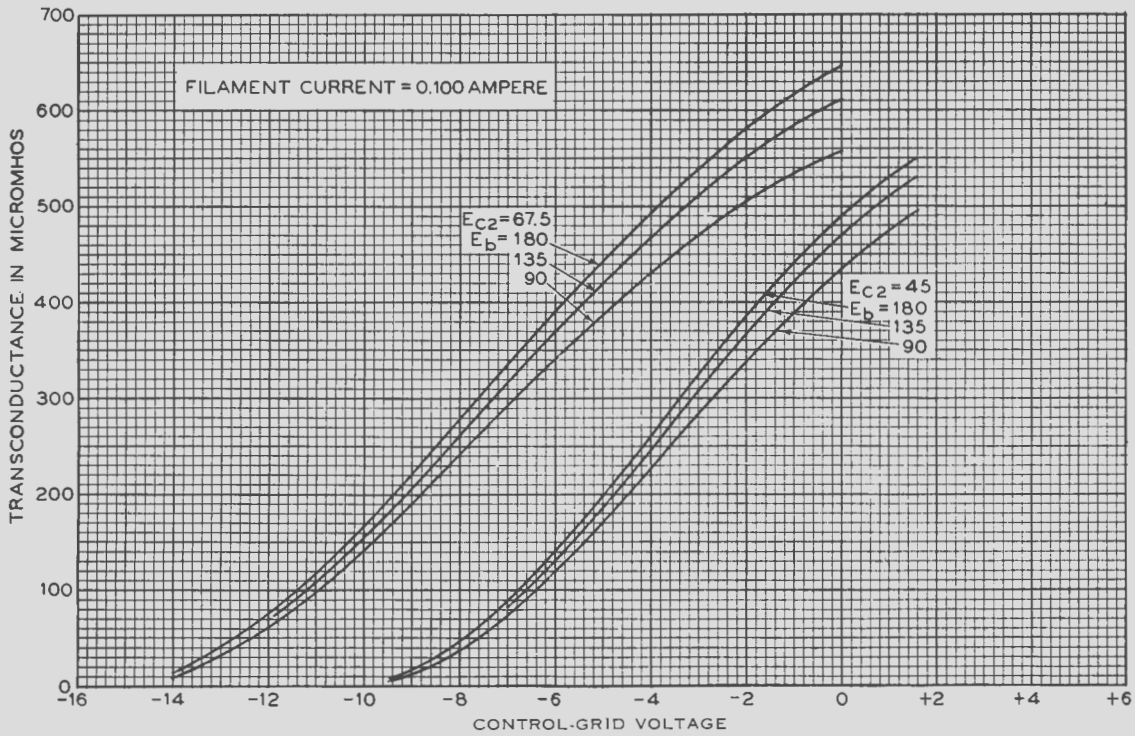

FIG. 7

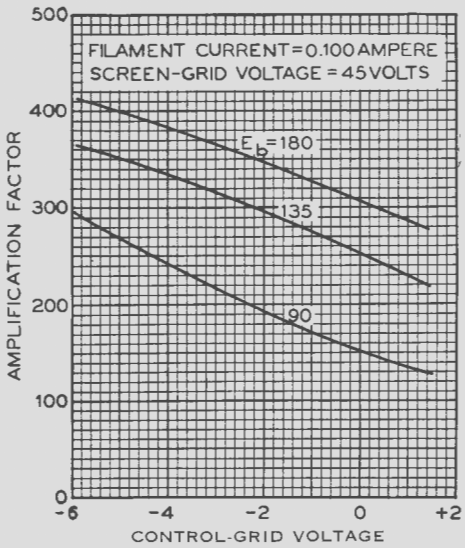

FIG. 8

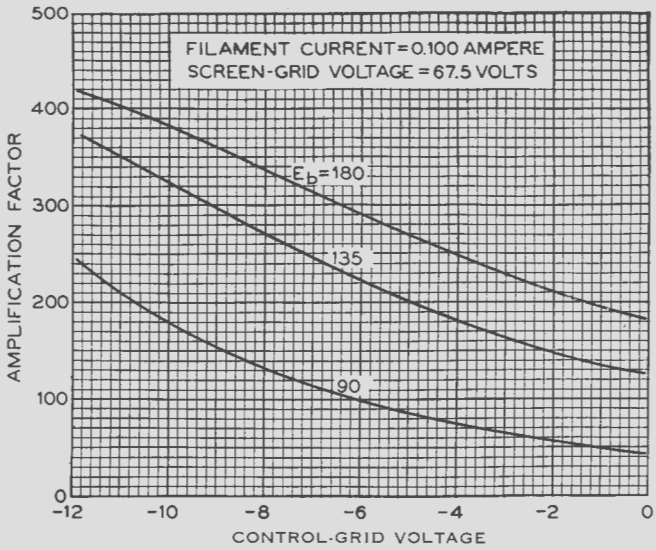

FIG. 9

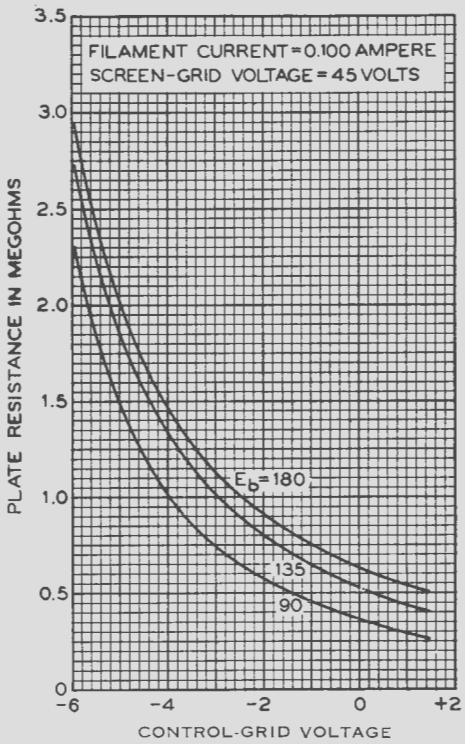

FIG. 10

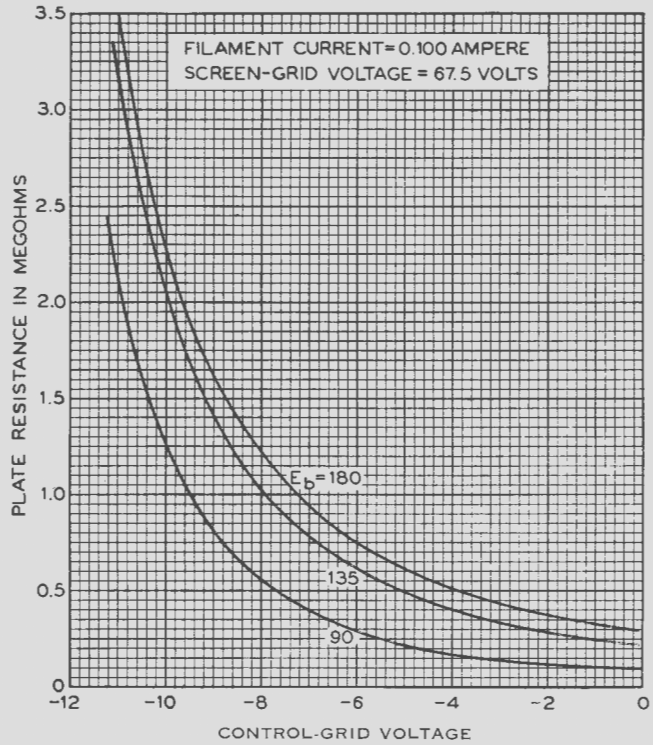

FIG. 11

1-C-36-28C
PRINTED IN U.S.A.

A development of Bell Telephone Laboratories, Incorporated, the research laboratories of the American Telephone and Telegraph Company, and the Western Electric Company

V. T. DATA SHEET 246A
ISSUE 1