Western Electric

363A Vacuum Tube

Classification

The 363A tube is a lined-up grid pentode for use at the meter wave lengths. Its high transconductance makes it suitable for Class A or Class B modulation purposes where low distortion is required. The lined-up grid feature allows high efficiency operation without excessive screen-grid dissipation.

The plate is supported solely by its lead from the glass envelope and no insulating material within the tube is subjected to high radio frequency potentials. The dish type base permits the shortening of leads to a minimum and the complete shielding within the tube between the control grid and plate allows the tube to be used as a radio frequency amplifier without neutralization, provided reasonable exterior shielding is applied.

Dimensions and Connections—Figure 1 shows the dimensions, arrangement of electrode connections and outline diagram. The overall dimensions are:

Maximum overall length	8″
Maximum diameter	5⅛″

Mounting—The tube may be mounted directly on the base terminals by means of supporting connectors which impart no bending or twisting stresses to the terminals. Such stresses might result in cracked seals or dislocated electrodes. The tube should be mounted in a vertical position. All objects shall be at least one inch from the glass bulb.

Copyright 1941 Western Electric Company, Incorporated

Filament—Thoriated Tungsten

Filament voltage	10.0 volts a.c.
Nominal filament current	10.0 amperes
Average thermionic emission	4.0 amperes

Average Characteristics—with a plate current of 0.5 ampere and a positive suppressor voltage of 70 volts.

Amplification factor	350
Grid plate transconductance	12,000 micromhos
Plate resistance	34,000 ohms

Average Direct Interelectric Capacitances

Grid to plate (with external shield)	0.06 mmf
Grid to filament, screen and suppressor	29.0 mmf
Plate to filament, screen and suppressor	21.0 mmf

Operation

Maximum Ratings

Max. direct plate voltage	4,000 volts
Max. direct plate current	0.500 ampere
Max. continuous plate dissipation	350 watts
Max. direct grid current	0.100 ampere
Max. direct screen voltage	1,000 volts
Max. continuous screen dissipation	75 watts

Class A Audio Amplifier or Modulator

Direct plate voltage	1,200	1,500	2,000 volts
Grid bias	−38	−40	−42 volts
Direct screen voltage	750	750	750 volts
Direct suppressor voltage	70	70	70 volts
Direct plate current	0.250	0.200	0.150 ampere
Direct screen current	0.060	0.050	0.040 ampere
Power output with total distortion of less than 5%	50	85	100 watts
Load impedance	7,000	10,000	15,000 ohms

Class B Audio Amplifier or Modulator for Balanced 2 Tube Circuit

Direct plate voltage	3,000	4,000 volts Max.
Grid bias	−60	−65 volts
Direct screen voltage	750	750 volts
Direct suppressor voltage	70	70 volts
Direct plate current, no drive	0.120	0.120 ampere
Direct plate current, max. signal	0.700	0.540 ampere
Load impedance, plate to plate	10,000	18,000 ohms
Approximate power output	1,600	1,650 watts
Direct screen current	0.175	0.150 ampere
Peak grid to grid drive voltage	240	200 volts
Approximate driving power	5	3 watts

Class B Radio Frequency Amplifier

Direct plate voltage	3,000	4,000 volts Max.
Grid bias	−70	−75 volts
Direct screen voltage	750	750 volts
Direct suppressor voltage	70	70 volts
Direct plate current at carrier conditions	0.175	0.130 ampere
Maximum carrier power output	175	175 watts
Approximate driving power at carrier	2.5	1.5 watts
Peak grid driving voltage at carrier	55	50 volts

Class C Radio Frequency Amplifier or Oscillator—Unmodulated

Direct plate voltage	3,000	4,000 volts Max.
Grid bias	−150	−150 volts
Direct screen voltage	750	750 volts
Direct suppressor voltage	70	70 volts
Direct plate current	0.450	0.400 ampere
Direct screen current	0.090	0.080 ampere
Direct grid current	0.025	0.015 ampere
Nominal power output	1,000	1,250 watts
Peak radio frequency grid voltage	255	240 volts
Approximate driving power	5	5 watts

Class C Radio Frequency Amplifier—Plate Modulated

Direct plate voltage	2,000	3,000 volts Max.
Grid bias	−200	−200 volts
Direct screen voltage	750	750 volts
Direct suppressor voltage	70	70 volts
Direct plate current	0.360	0.340 ampere
Direct screen current	0.080	0.075 ampere
Direct grid current (approx.)	0.20	0.015 ampere
Peak grid driving voltage (approx.)	300	300 volts
Nominal carrier power output	670	780 watts
Driving power (approx.)	5	5 watts

Operating Precautions

Mechanical—Figure 1 shows the overall dimensions and basing arrangement for the tube.

The tubes should not be subjected to mechanical shock or excessive vibration. Mechanical vibration may cause breakage of the thoriated tungsten filaments.

Under all operating conditions, forced-air cooling must be provided and the air streams directed at the base and top terminals. The connectors should be heavy enough to conduct heat away from the terminals.

Electrical—Overload protection should always be provided for the plate and screen circuits. Suitable fuses or circuit breakers should remove both plate and screen voltages should the plate current exceed 0.6 ampere or the screen current exceed 0.10 ampere. Although the tube is sufficiently rugged to withstand momentary overloads, a prolonged overload caused by inefficient adjustment of the circuit or failure of circuit elements may damage the tube. When adjusting a new circuit, reduced plate voltage or a series resistance of 2,000 to 5,000 ohms in the plate circuit should be used until it is operating properly.

Screen voltage should always be applied after the plate voltage has been turned on, and should be removed before the plate voltage. Otherwise, the resulting excessive screen dissipation may permanently damage the tube. If a series resistor in the plate supply is used to obtain the screen voltage, both screen and plate may be energized simultaneously.

Audio Amplifier or Modulator

Class A—Peak grid drive equal to or less than the grid bias.

Grid bias may be obtained from the drop across a resistance in the plate current return or from a battery or rectifier supply.

Plate dissipation allowable for this type of service is generally lower than is safe for other uses since the energy is dissipated in the plate in smaller areas due to relatively high voltage drop in the tube.

The plate dissipation is equal to the plate voltage multiplied by the normal plate current. Performance data are based upon the use of a resistance load. Undistorted output is calculated on the basis of 5% second harmonic distortion.

Class B—Grid bias practically at cut-off and grid driving voltage higher than the bias.

In a Class B audio-frequency power amplifier or modulator, two 363A tubes may be used in a balanced circuit. A driving stage capable of about 50 to 75 watts output is required, and an input transformer with good regulation must be used so that the grid current drawn during positive grid swings does not produce appreciable distortion. The output transformer must transform the load impedance to the proper value. The power output obtainable will be determined by the quality of the transformer used and the amount of distortion which can be tolerated. The grid bias must be held constant and therefore cannot be obtained by grid leak or series resistor methods. A battery or other source having good regulation is necessary.

The power required of a modulator for complete modulation of a Class C amplifier is one-half the direct power input to the plates of the Class C amplifier.

Radio Frequency Oscillator or Power Amplifier

Class B—Radio Frequency Linea Amplifier. Grid bias practically at cut-off.

The Class B radio frequency amplifier is used to amplify a modulated radio frequency carrier wave without appreciable distortion. It operates similarly to the Class B audio amplifier except that only a single tube need be used, the tuned output circuit serving to preserve the wave shape. The push-pull circuit, however, eliminates the even order harmonics and thus increases the efficiency slightly.

Class C—Radio Frequency Oscillator or Power Amplifier—Grid Bias Below Cut-Off.

Unmodulated

This type of operation is suitable for frequency modulation, telegraphy, or the production of a continuous flow of radio-frequency power for purposes other than communication.

Plate Modulated

This type of operation is for use when the modulating voltage is superimposed on the plate supply and to obtain good quality the output power should vary as the square of the plate voltage. For complete or 100% modulation, the plate voltage varies from zero to twice the applied direct value during a cycle of the audio frequency. With no modulation applied, the plate voltage is, of course, the direct value and the carrier power output is one-fourth of the peak power output under 100% modulation.

Ultra High Frequency Operation

The 363A tube may be operated at full voltage and dissipation ratings at frequencies up to 85 megacycles if, in addition to the forced air cooling, connectors are provided which will remain cool when carrying high frequency charging currents.

The tube will be found to operate efficiently at frequencies from 30 to 85 megacycles because of its low grid-plate capacitance and the short filament screen and suppressor leads which allow a maximum amount of circuit available external to the tube envelope.

Above 85 megacycles, the efficiency drops off rapidly and for this reason the plate voltage and input must be decreased to prevent excessive plate dissipation.

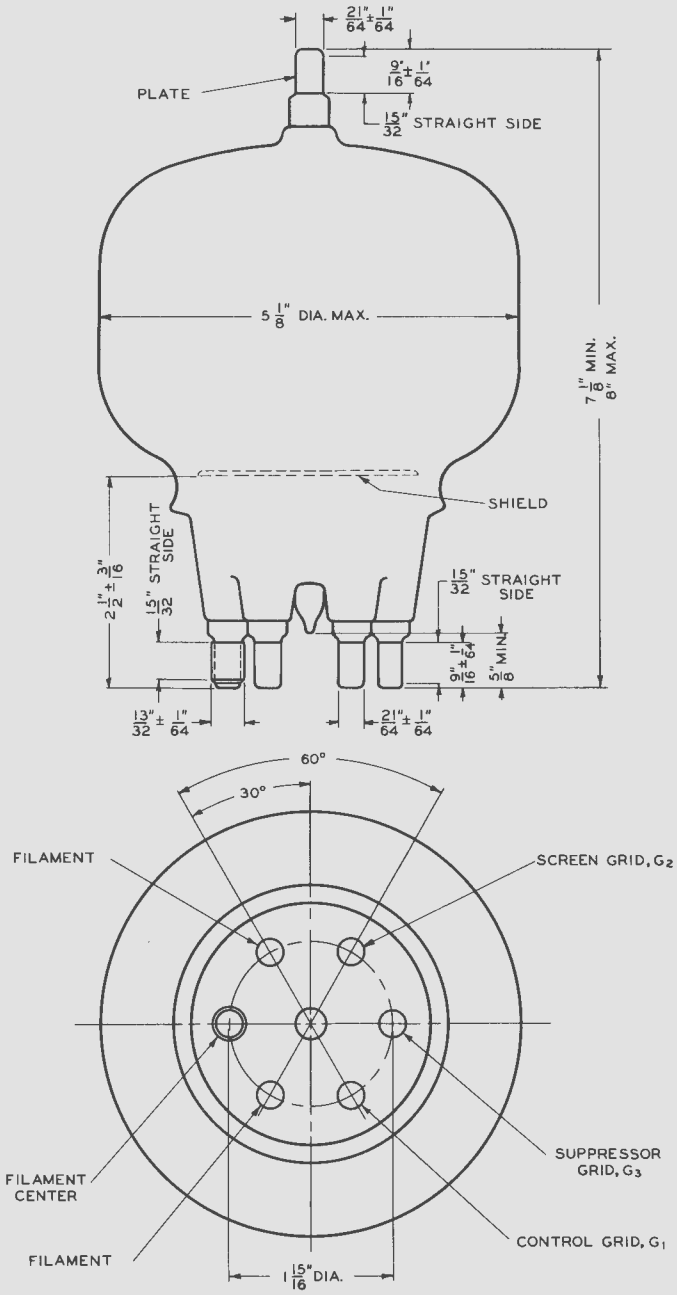
21/64" ± 1/64"
9/16" ± 1/64"
PLATE
15/32" STRAIGHT SIDE
5 1/8" DIA. MAX.
7 1/8" MIN.
8" MAX.
SHIELD
2 1/2" ± 3/16"
15/32" STRAIGHT SIDE
15/32" STRAIGHT SIDE
9/16" ± 1/64"
5/8" MIN.
13/32" ± 1/64"
21/64" ± 1/64"
60°
30°
FILAMENT
SCREEN GRID, G2
SUPPRESSOR GRID, G3
FILAMENT CENTER
CONTROL GRID, G1
FILAMENT
1 15/16" DIA.

FIG. 1

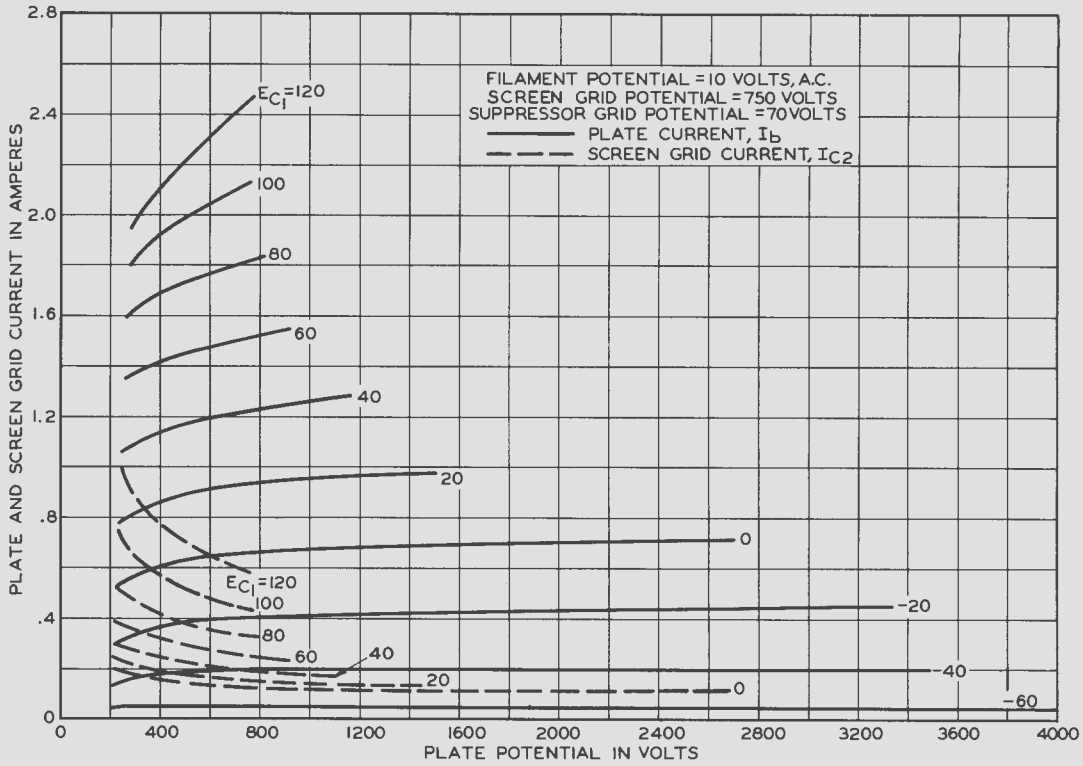

FIG. 2

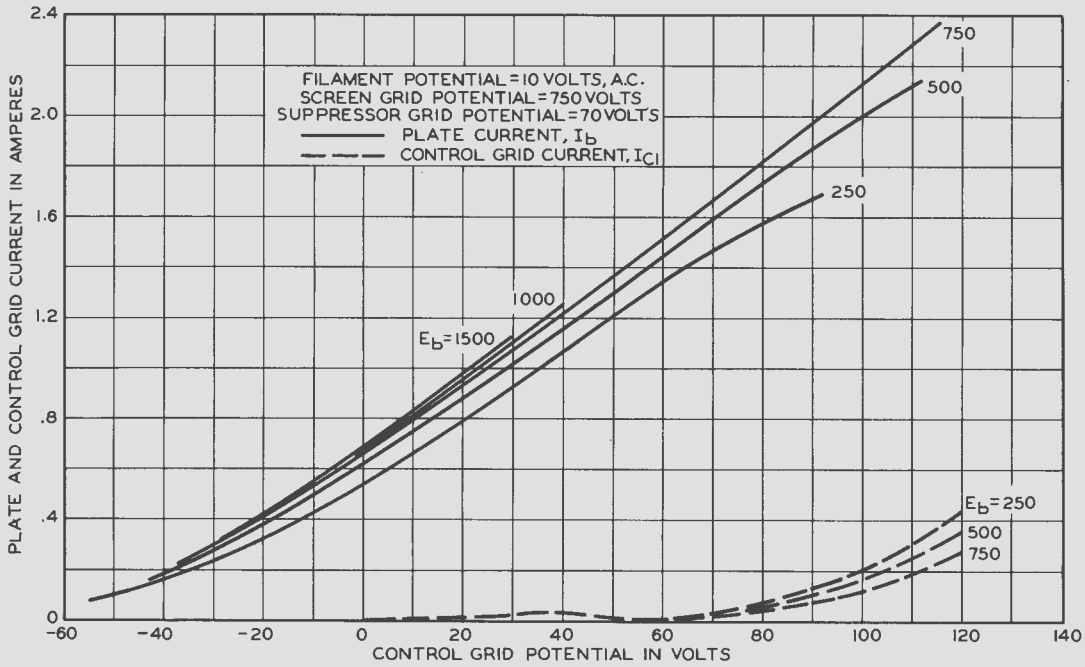

FIG. 3

1-D-41-35C
PRINTED IN U.S.A.

A development of Bell Telephone Laboratories, Incorporated, the research laboratories of the American Telephone and Telegraph Company and the Western Electric Company

V. T. DATA SHEET 363A
ISSUE 1