Western Electric

236A Vacuum Tube

Classification—Filamentary water-cooled triode

May be used as an audio-frequency amplifier or as a radio-frequency oscillator, amplifier or modulator.

Dimensions—Dimensions and outline diagrams are shown in Figure 1. The overall dimensions are:

Maximum overall length	30″
Maximum diameter	3¾″

Copyright 1936 Western Electric Company, Incorporated

Mounting—W. E. 132A, 133A or similar socket. The tube should be mounted only in a vertical position with the anode end down.

Filament—Tungsten

Filament voltage	21.5 volts, a.c.
Nominal filament current	41.0 amperes
Average thermionic emission	7.0 amperes

Average Direct Interelectrode Capacitances

Plate to grid	27.8 $\mu\mu$f.
Grid to filament	29.4 $\mu\mu$f.
Plate to filament	0.7 $\mu\mu$f.

Characteristics—Performance data given below are based upon a typical set of conditions. Variations can be expected with different circuits and tubes.

Figures 2 and 3 give the static characteristics of a typical tube plotted against grid and plate voltages.

Average Characteristics at plate voltage of 15,000 and plate current of 1.0 ampere, $E_c = -100$ volts.

Amplification factor	40
Plate resistance	6200 ohms
Grid to plate transconductance	6450 micromhos

Operation

Maximum Ratings

Max. direct plate voltage	20000 volts
Max. direct plate current	2.0 amperes
Max. plate dissipation	20000 watts
Max. grid dissipation	300 watts
Max. r-f grid current	25 amperes
Max. frequency for the above ratings	3 megacycles
Max. plate voltage for upper frequency limit of 12 Mc	5000 volts
Max. plate voltage for frequencies between 3 and 12 Mc in proportion	

Class B Audio Amplifier or Modulator for Balanced 2 Tube Circuit

Direct plate voltage	17500	12500 volts
Grid bias	−350	−220 volts
Direct plate current per tube		
No drive	0.150	0.150 ampere
Max. drive	1.25	1.25 amperes
Plate dissipation	10000	7000 watts
Load resistance plate-to-plate	13000	9000 ohms
Load resistance per tube	3250	2250 ohms
Approximate max. output—2 tubes	25000	17500 watts
Recommended power for driving stage	1000	1000 watts

Class B Radio-Frequency Amplifier

Direct plate voltage	15000	10000 volts
Direct plate current for carrier conditions	1.00	1.50 amperes
Grid bias	−375	−250 volts
Approximate carrier watts for use with 100% modulation	5000	5000 watts

Class C Radio-Frequency Oscillator or Power Amplifier—Unmodulated

Direct plate voltage	12000	10000 volts
Direct plate current	1.50	1.50 amperes
Grid bias	−450 to −600	−375 to −500 volts
Nominal power output	12000	10000 watts
Plate dissipation	6000	5000 watts

Class C Radio-Frequency Amplifier—Plate Modulated

Direct plate voltage	10000	7500 volts
Direct plate current	1.50	1.50 amperes
Grid bias	−500	−400 volts
Max. direct grid current	150	150 milliamperes
Nominal carrier power output	10000	7500 watts

Operating Precautions

Mechanical—Figure 1 shows the overall dimensions and basing arrangement for the tube.

The tubes should not be subjected to mechanical shock or excessive vibration. Mechanical vibration may cause breakage of the tungsten filaments.

A free circulation of air must be provided to insure adequate cooling of the glass during operation.

The cooling water should be of sufficient purity to retard the tendency toward the formation of scale on the anode. Formation of scale would have the effect of insulating the anode from the water and the ineffective cooling of the anode would result in failure of the tube. It is therefore recommended that distilled water be used in the cooling system.

The temperature of the water and rate of flow should be such that there is no tendency to boil, as indicated by a hissing sound, under maximum dissipation. In general, the outlet water temperature should not exceed 75° C. and the rate of flow should be not less than 7 gallons per minute. The minimum length of hose which can be used to insulate the plate from the water supply which is usually grounded will depend upon the resistivity of the water used and the leakage current that can be tolerated. In no case must this be less than 15 feet. The hose connections must always be made so that the water flows in at the center port of the tube socket.

Provision should be made in the circuit to safeguard against the filament and plate voltages being applied until the cooling water is circulating at the proper rate and temperature, and for the immediate cut-off of the filament and plate voltages if the circulating rate falls below the allowed minimum or the temperature exceeds the allowable maximum. A momentary interruption of the water circulation during operation of the tube may cause immediate failure.

Electrical—Overload protection should always be provided for the plate circuit. A suitable fuse or circuit breaker should remove the plate voltage if the plate current exceeds 2.5 amperes. Although the tube is sufficiently rugged to withstand momentary overloads, a prolonged overload caused by inefficient adjustment of the circuit, may damage the tube. When adjusting a new circuit or installing a new tube, reduced plate voltage or a series resistance of 1000 to 5000 ohms in the plate circuit should be used until it is operating properly.

The filament should always be operated at the rated voltage, measured at the tube terminals. A 5% decrease in filament voltage reduces the thermionic emission approximately 35%. If satisfactory operation can be obtained at lower than the rated voltage, an increase in filament life may be obtained. Either direct or alternating current may be used for heating the filament. If direct current is used, the plate and grid circuit returns should be connected to the positive filament terminal. Also the connections to the filament terminals should be reversed periodically. If alternating current is used, the circuit returns should be connected to the center tap of the filament heating transformer winding or to the center tap of a resistor placed between the filament terminals. A resistance of 50 to 75 ohms of 150 watt rating is suitable.

Some provision should be made to limit the initial filament current, when the filament is cold. This may be done by inserting additional resistance in the filament circuit when voltage is first applied or by using a transformer having sufficiently high reactance.

Audio Amplifier or Modulator

Class A—Peak grid drive equal to or less than the grid bias.

Grid bias may be obtained from the drop across a resistance in the plate current return or from a battery or rectifier supply.

Plate dissipation allowable for this type of service is generally lower than is safe for other uses since the energy is dissipated in the plate in smaller areas due to relatively high voltage drop in the tube.

The plate dissipation is equal to the plate voltage multiplied by the normal plate current. Performance data are based upon the use of a resistance load. Undistorted output is calculated on the basis of 5% second harmonic distortion.

Class B—Grid bias practically at cut-off and grid having voltage higher than the bias.

Two tubes may be used in a balanced circuit. An adequate driving stage and an input transformer with good regulation must be used so that the grid current drawn during positive grid swings does not produce appreciable distortion. The output transformer must transform the load impedance to the proper value for the tubes used. The power output obtainable will be determined by the quality of the transformer used and the amount of distortion which can be tolerated. The output can be increased or the distortion decreased by the use of degenerative feedback. The grid bias must be held constant and therefore cannot be obtained by grid leak or series resistor methods. A battery or other source having good regulation is necessary.

The power required of a modulator for complete modulation of a Class C amplifier is one-half the direct power input to the plates of the Class C amplifier.

Radio-Frequency Oscillator or Power Amplifier

Class B—Radio-Frequency Amplifier

The Class B radio-frequency amplifier is used to amplify a modulated radio-frequency carrier wave without appreciable distortion. It operates similarly to the Class B audio amplifier except that a single tube may be used, the tuned output circuit serving to preserve the wave shape. The push-pull circuit, however, eliminates the even order harmonics and thus increases the efficiency slightly.

Class C—Radio-Frequency Oscillator or Power Amplifier—Grid bias below cut-off

Unmodulated

This type of operation is suitable for telegraphy, or the production of a continuous flow of radio-frequency power for purposes other than communication.

Plate Modulated

This type of operation is for use when the modulating voltage is superimposed on the plate supply voltage and to obtain good quality the output power should vary as the square of the plate voltage. For complete or 100% modulation, the plate voltage varies from zero to twice the applied direct value during a cycle of the audio frequency. With no modulation applied, the plate voltage is, of course, the direct value and the carrier power output is one-fourth of the peak power output under 100% modulation. In this case, since the plate voltage varies with modulation, the direct value must be rated lower than for other types of operation.

High Frequency Ratings

The frequency limits specified under maximum ratings are based on the tube being used as an oscillator. The tube may be used at full rating up to 3 megacycles. When operating at higher frequencies, the dielectric losses, charging currents and lead-in heating are increased greatly. The plate voltage and hence plate dissipation must be reduced to values specified for the upper frequency limit and for frequencies between these two limits the plate voltage should be proportionately reduced.

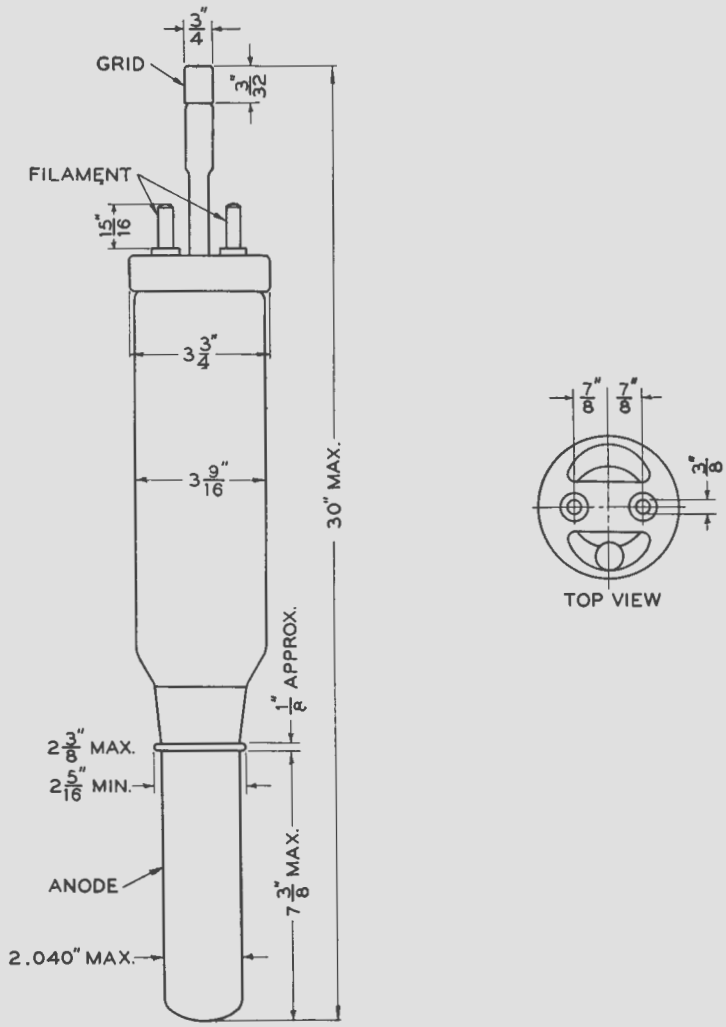

FIG. 1

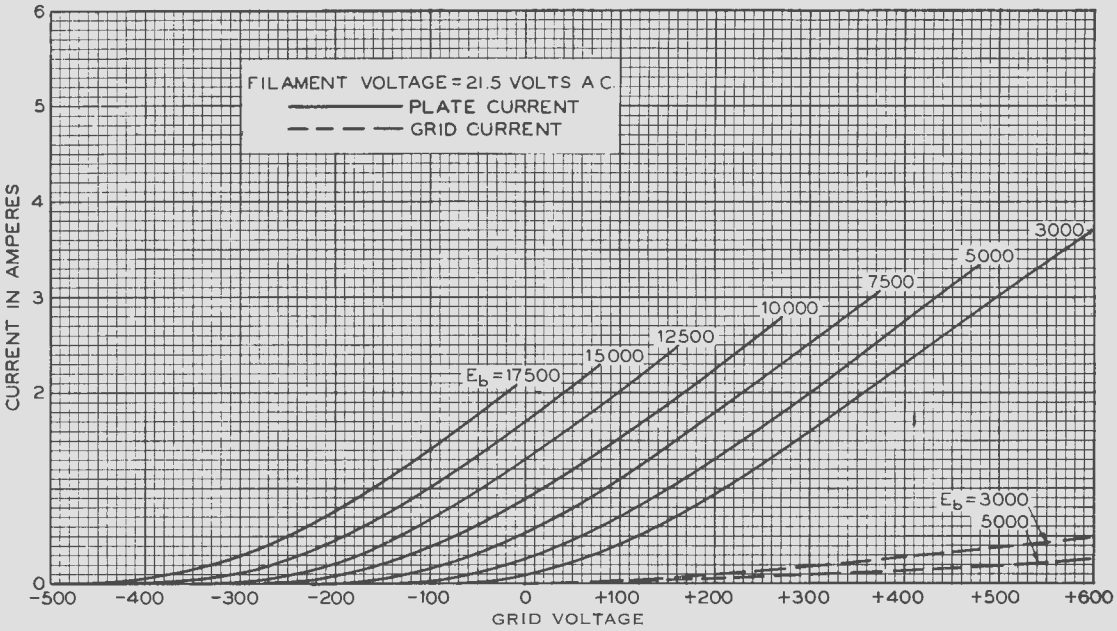

FIG. 2

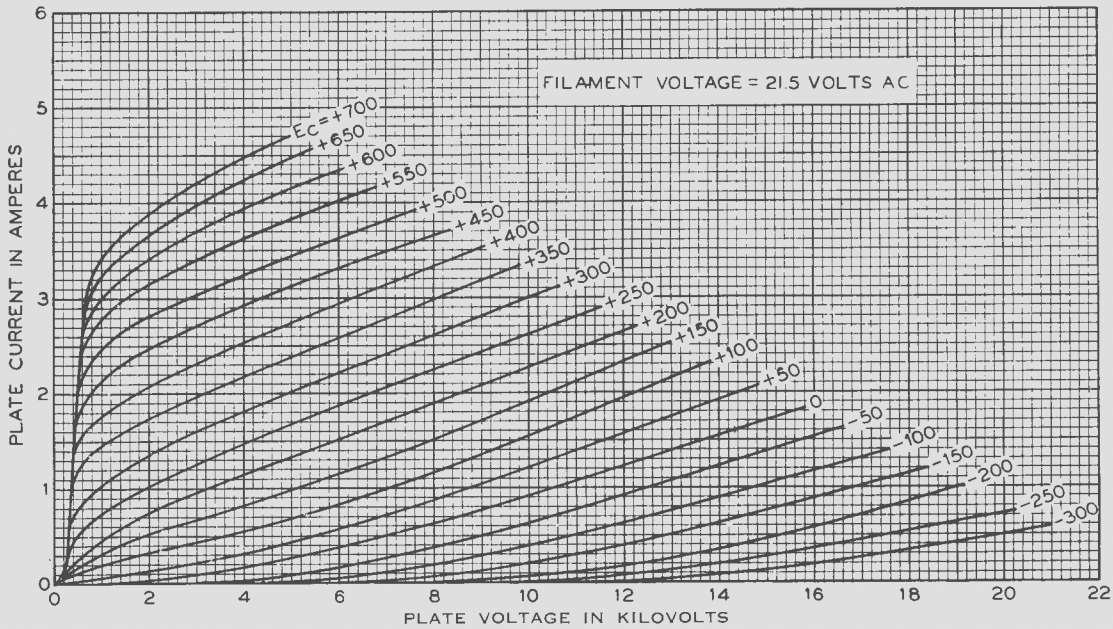

FIG. 3

1-D-36-28C
PRINTED IN U.S.A.

A development of Bell Telephone Laboratories, Incorporated, the research laboratories of the American Telephone and Telegraph Company, and the Western Electric Company

V. T. DATA SHEET 236A
ISSUE 1