Western Electric

331A Vacuum Tube

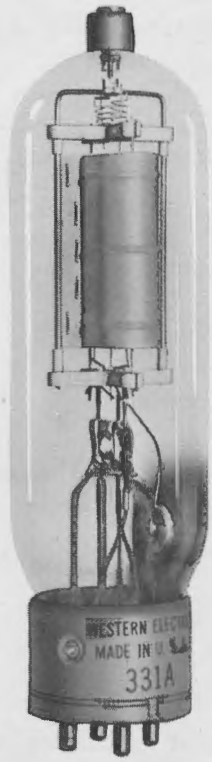

Classification—Filamentary Air-Cooled Triode

This tube is intended primarily for class B audio-frequency use where the variable amplification factor allows the production of high output with minimum distortion. It may also be used as a radio-frequency amplifier or oscillator up to 30 megacycles at full rating.

Dimensions—Dimensions and outline diagrams are shown in Figures 1 and 2 and are

Maximum overall length	8½″
Maximum diameter	2 5/16″

Mounting—This tube employs a large four-pin bayonet type base suitable for use in a Western Electric 145A or similar socket, for either vertical or horizontal mounting. If mounted horizontally, the plane of the filament, which is indicated in Figure 2, should be vertical.

Filament—Thoriated tungsten.

Filament voltage	10 volts, a.c.
Nominal filament current	3.25 amperes
Average thermionic emission	1.5 amperes

Copyright, 1939, Western Electric Company, Incorporated

Average Direct Interelectrode Capacitances

Plate to grid	6.7 μμf.
Grid to filament	9.0 μμf.
Plate to filament	2.6 μμf.

Characteristics—Performance data given below are based upon a typical set of conditions. Variations can be expected with different circuits and tubes.

Figures 3, 4 and 5 give the static characteristics of a typical tube plotted against grid and plate voltages.

Average Characteristics at 0.085 ampere plate current.

Amplification factor	40
Plate resistance	8900 ohms
Grid to plate transconductance	4500 micromhos

Operation

Maximum Ratings

Max. direct plate voltage	1500 volts
Max. direct plate current	200 milliamperes
Max. plate dissipation	125 watts
Max. direct grid current	70 milliamperes
Max. r-f grid current	5 amperes
Max. frequency for the above ratings	30 megacycles

Class B Audio Amplifier or Modulator for Balanced 2 Tube Circuit

Direct plate voltage	1500	1250 volts
Grid bias*	−20	0 volts
Direct plate current per tube		
No drive	40	70 milliamperes
Maximum drive	200	200 milliamperes
Load resistance plate-to-plate	8000	6800 ohms
Load resistance per tube	2000	1700 ohms
Power output depends on distortion requirements		
Approximate maximum output—2 tubes	370	300 watts
Recommended power for driving stage	7	6 watts

*Grid return to filament circuit center tap.

Class B Radio-Frequency Amplifier

Direct plate voltage	1500	1250 volts
Direct plate current for carrier conditions	115	130 milliamperes
Grid bias	−10	0 volts
Approximate carrier power for use with 100% modulation	57.5	55 watts
Driving power (approx.)	7.5	11 watts

Class C Radio-Frequency Oscillator or Power Amplifier—Unmodulated

Direct plate voltage	1500	1250 volts
Direct plate current	215	205 milliamperes
Grid bias	−105	−100 volts
Direct grid current (approx.)	40	40 milliamperes
Nominal power output	215	170 watts
Driving power (approx.)	8.5	8.5 watts

Class C Radio-Frequency Amplifier—Plate Modulated

Direct plate voltage	1250 max.	1000 volts
Direct plate current	165	165 milliamperes
Grid bias	−160	−155 volts
Max. direct grid current (approx.)	60	60 milliamperes
Nominal carrier power output for use with 100% modulation	140	110 watts
Driving power (approx.)	16	16 watts

Operating Precautions

Mechanical—Figures 1 and 2 show the overall dimensions and basing arrangement for the tube.

The tubes should not be subjected to mechanical shock or excessive vibration. Mechanical vibration may cause breakage of the thoriated tungsten filaments.

A free circulation of air must be provided to insure adequate cooling of the glass during operation.

Electrical—Overload protection should always be provided for the plate circuit. A suitable fuse or circuit breaker should remove the plate voltage if the plate current exceeds 275 milliamperes. Although the tube is sufficiently rugged to withstand momentary overloads, a prolonged overload caused by inefficient adjustment of the circuit, may damage the tube. When adjusting a new circuit reduced plate voltage or a series resistance of 1000 to 5000 ohms in the plate circuit should be used until it is operating properly.

The filament should always be operated at the rated voltage measured at the tube terminals. A 5% decrease in filament voltage reduces the thermionic emission approximately 25%. Either direct or alternating current may be used for heating the filament. If direct current is used, the plate and grid circuit returns should be connected to the negative filament terminal. If alternating current is used, the circuit returns should be connected to the center tap of the filament heating transformer winding or the center tap of a resistor placed between the filament terminals. A resistance of 20 to 30 ohms of three watt rating is suitable.

In cases where severe and prolonged overload has temporarily impaired the electronic emission of the filament, the activity may be restored by operating the filament, with the plate and grid voltages off, 30% above normal voltage for 10 minutes followed by a longer period at normal voltage.

Audio Amplifier or Modulator

Class B—Grid bias practically at cut-off and grid driving voltage higher than the bias.

Two tubes may be used in a balanced circuit. An adequate driving stage and an input transformer with good regulation must be used so that the grid current drawn during positive

grid swings does not produce appreciable distortion. The output transformer must transform the load impedance to the proper value. The power output obtainable will be determined by the quality of the transformer used and the amount of distortion which can be tolerated. The grid bias must be held constant and therefore cannot be obtained by grid leak or series resistor methods. A battery or other source having good regulation is necessary.

The power required of a modulator for complete modulation of a Class C amplifier is one-half the direct power input to the plates of the Class C amplifier.

Radio-Frequency Oscillator or Power Amplifier

Class B—Radio-Frequency Amplifier—Grid bias practically at cut-off.

The Class B radio-frequency amplifier is used to amplify a modulated radio-frequency carrier wave without appreciable distortion. It operates similarly to the Class B audio amplifier except that only a single tube need be used, the tuned output circuit serving to preserve the wave shape. The push-pull circuit, however, eliminates the even order harmonics and thus increases the efficiency slightly.

Class C—Radio-Frequency Oscillator or Power Amplifier—Grid bias below cut-off.

Unmodulated

This type of operation is suitable for telegraphy, or the production of a continuous flow of radio-frequency power for purposes other than communication.

Plate Modulated

This type of operation is for use when the modulating voltage is superimposed on the plate supply voltage and to obtain good quality the output power should vary as the square of the plate voltage. For complete or 100% modulation, the plate voltage varies from zero to twice the applied direct value during a cycle of the audio frequency. With no modulation applied the plate voltage is, of course, the direct value and the carrier power output is one-fourth of the peak power output under 100% modulation. In this case, since the plate voltage varies with modulation, the direct value must be rated lower than for other types of operation.

High Frequency Ratings

The frequency limits specified under maximum ratings are based on the tube being used as an oscillator. This tube is designed for use at full rating up to 30 megacycles. When operating at higher frequencies, the dielectric losses, charging currents and lead-in heating may be increased to an excessive degree. Accordingly, the plate voltage, and consequently the plate input must be reduced gradually as the frequency is increased beyond 30 megacycles. At 85 megacycles the plate voltage should be one-half the ratings at 30 megacycles.

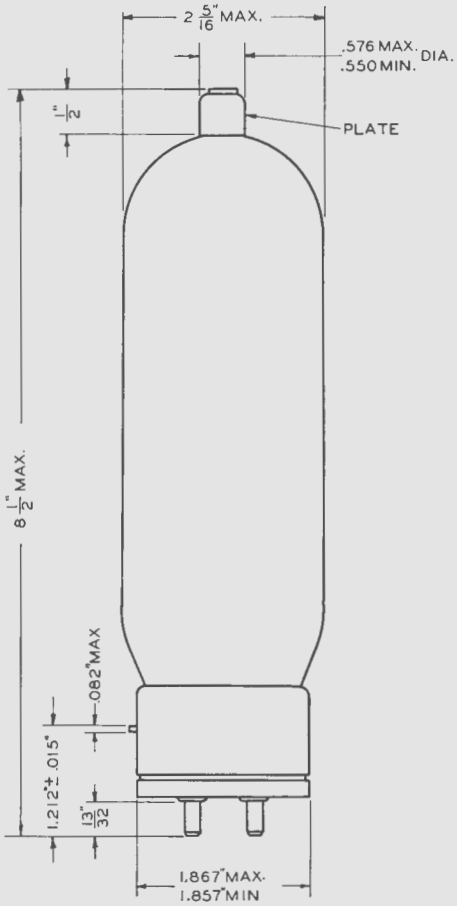

FIG. 1

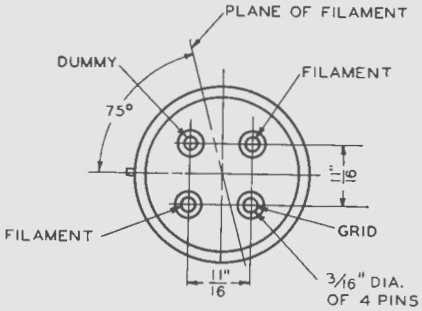

FIG. 2

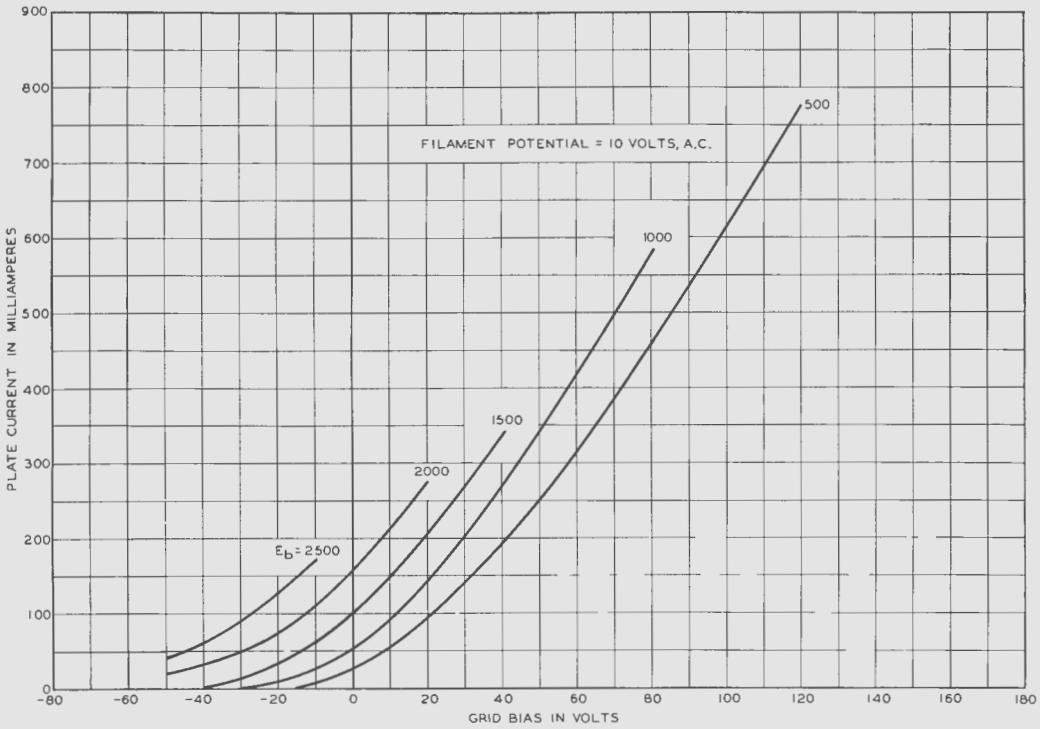

FIG. 3

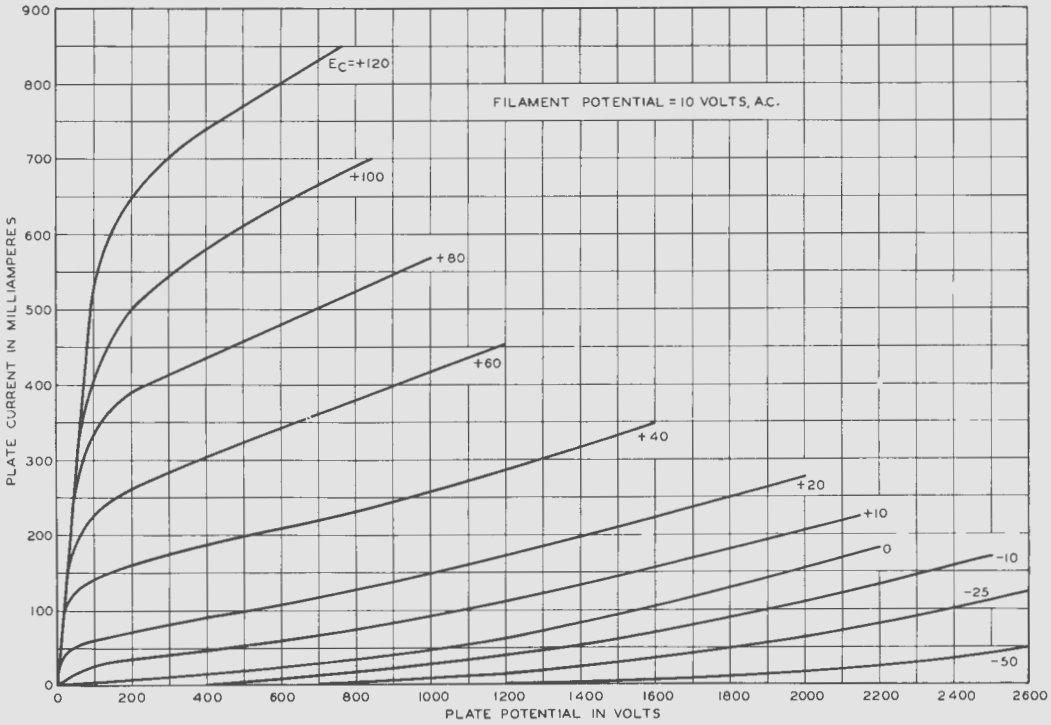
FILAMENT POTENTIAL = 10 VOLTS, A.C.
PLATE CURRENT IN MILLIAMPERES
PLATE POTENTIAL IN VOLTS
Ec=+120
+100
+80
+60
+40
+20
+10
0
-10
-25
-50
0
100
200
300
400
500
600
700
800
900
0
200
400
600
800
1000
1200
1400
1600
1800
2000
2200
2400
2600

FIG. 4

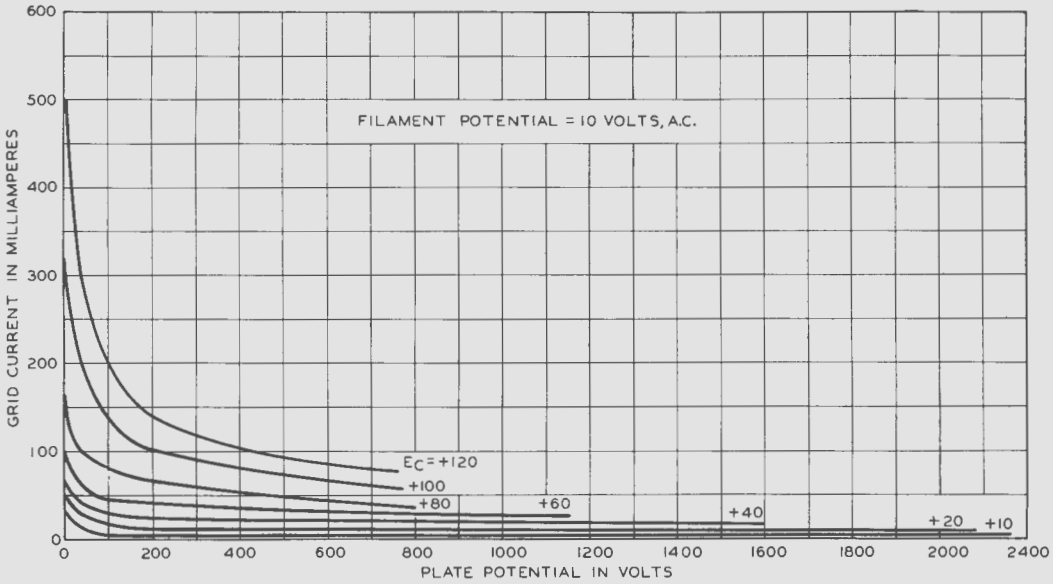
FILAMENT POTENTIAL = 10 VOLTS, A.C.
GRID CURRENT IN MILLIAMPERES
PLATE POTENTIAL IN VOLTS
Ec=+120
+100
+80
+60
+40
+20
+10
0
100
200
300
400
500
600
0
200
400
600
800
1000
1200
1400
1600
1800
2000
2400

FIG. 5