Western Electric

297A Vacuum Tube

Classification—Three element, argon filled, filamentary thyratron

This tube is a rectifier of low internal impedance in which the starting of the conduction cycle may be controlled by the grid. It is intended for use in special circuits as a relay or trigger-action device. A few of its other possible uses are: as a controlled-frequency oscillator giving a square wave-form, as a voltmeter or volume level-indicator, or as a source of sweep-voltage for a linear time axis.

Dimensions—The dimensions and outline diagrams are given in Figures 1 and 2. The overall dimensions are:

Maximum length	4″
Diameter	$1\frac{3}{16}$″

Mounting—This vacuum tube employs a standard four-pin thrust type base suitable for use in a Western Electric 143B or similar socket. The arrangement of electrode connections to the base terminals is shown in Figure 2.

The tube may be mounted in either a vertical or horizontal position, although the vertical position is preferable. If mounted in a horizontal position the plane of the filament, which is indicated in Figure 2, should be vertical.

Filament Rating

Filament voltage	1.75 volts
Nominal filament current	0.350 ampere
Required filament heating time	2 seconds

Copyright, 1939, Western Electric Company, Incorporated

The filament of this tube is designed to operate on a voltage basis. The voltage should be maintained to within 5% of its rated value (1.75 volts). Operation of the filament above the upper limit will definitely reduce the life of the tube, while a decrease below the lower limit may cause immediate failure.

Sufficient time should always be allowed for the cathode temperature to reach its normal operating value before anode current is drawn. If filament transformers with good regulation are used this time is 2 seconds. Failure to allow sufficient time may result in immediate failure. If instantaneous anode currents less than 10 milliamperes are desired with anode voltages less than 50 volts, anode current may be drawn simultaneously with the application of filament voltage; but approximately 2 seconds will be required for the anode current to reach its final value.

Operating Conditions

Approximate tube voltage drop	20 volts
Maximum instantaneous anode current	60 milliamperes
Maximum average anode current	10 milliamperes
Maximum time of averaging anode current	0.5 second
Maximum peak voltage between anode and grid	250 volts
Maximum instantaneous grid current	10 milliamperes
Operating ambient temperature range	−20° to +50° C.
Nominal deionization time	100 microseconds

The characteristics of the 297A tube are such that, for any given positive anode potential, there is a critical grid potential. If the grid is held more negative than this value and the tube is non-conducting, the anode current will remain zero. If it is made less negative, the tube becomes conducting, and the anode current assumes a value determined by the applied anode potential and the impedance in the anode circuit. When the tube is conducting, the tube voltage drop is practically independent of the value of both the anode current and the grid potential. To extinguish the discharge and reestablish control by the grid, the anode potential must be reduced to zero or made negative for a period at least as long as the deionization time (100 microseconds).

A typical curve relating the critical grid potential to the anode potential is shown in Figure 3. This characteristic may vary from tube to tube and during the life of a given tube.

The maximum anode current is specified in terms of an instantaneous value (60 milliamperes) and an average value (10 milliamperes), with a maximum period of averaging of 0.5 second. These are maximum limitations and should not be exceeded.

Sufficient resistance must always be included in the grid circuit to limit the negative grid potential to 10 volts when anode current is flowing. Failure to observe this precaution will result in short tube life.

Typical Circuits

The tube may be used in a variety of circuits. Two general types are common. One use of the tube is to produce a saw-toothed, current wave. The circuit for this application is shown in Figure 4. The resistance R should, ordinarily, be at least 100,000 ohms, and the product RC (C in farads) approximately equal to the desired fundamental period.

The second general use for the tube is as a relay. In this application the anode may be supplied from either alternating or direct current. When supplied from direct current, the circuit, Figure 5, possesses a "lock-in" feature, since the anode potential must be removed momentarily in order to restore the tube to the non-conducting condition. When supplied from alternating current, the circuit possesses no "lock-in" feature, but the average anode current may be controlled by the relative phase of grid and anode potentials. The schematic circuit for this application is shown in Figure 6. Figure 7 is a simplified circuit employing a photoelectric cell in place of the resistance,

R, used in the phase shifting device in Figure 6. The photoelectric cell, however, is equivalent to a variable resistance in the sense that the current passed will depend upon the amount of light falling on it. In circuits Figures 6 and 7 alternating current may be used for the filament supply.

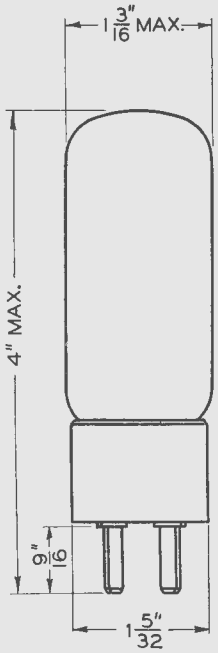

FIG. 1

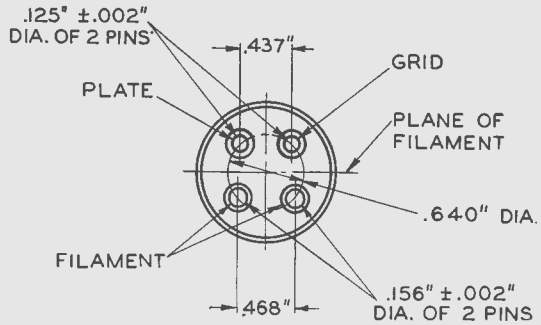

FIG. 2

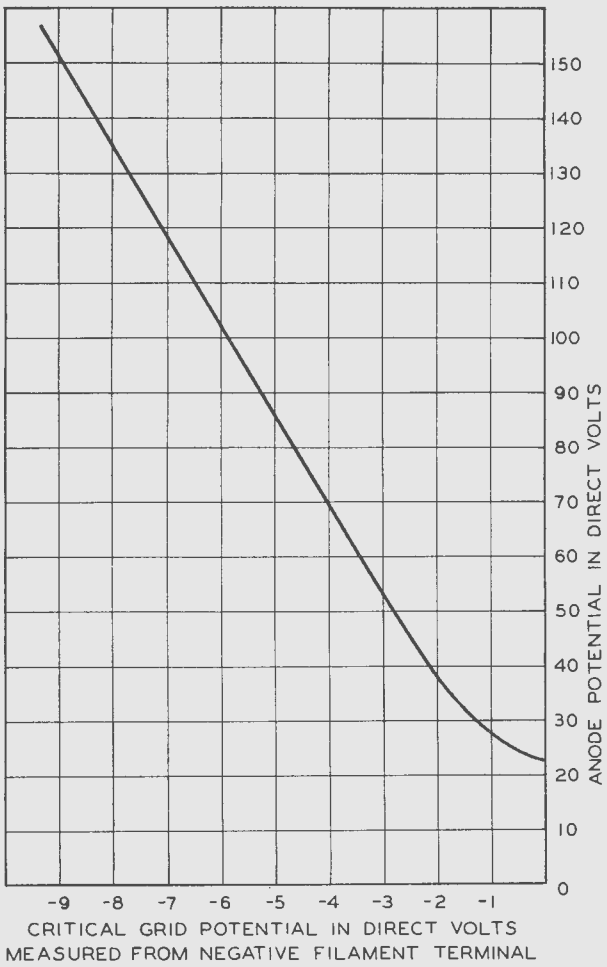

FIG. 3

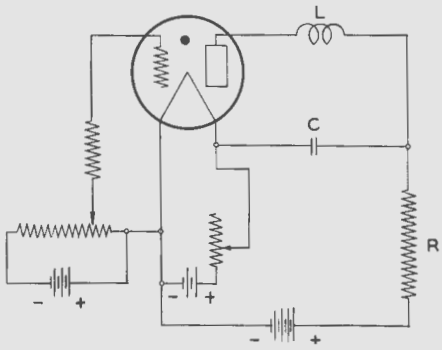

FIG. 4

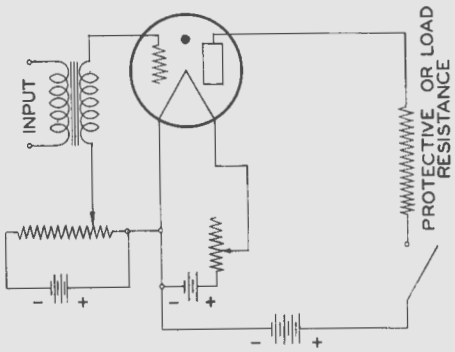

FIG. 5

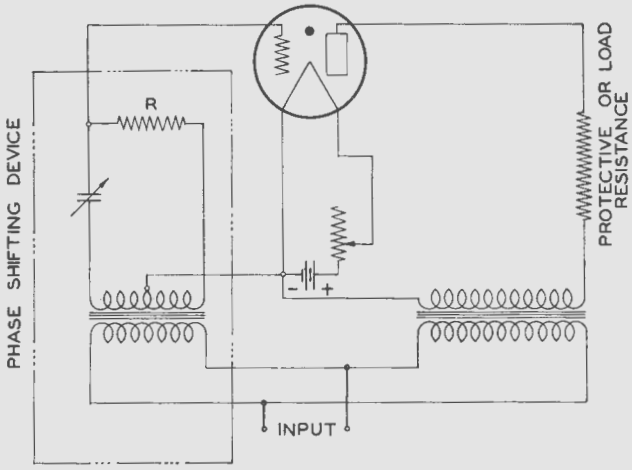

FIG. 6

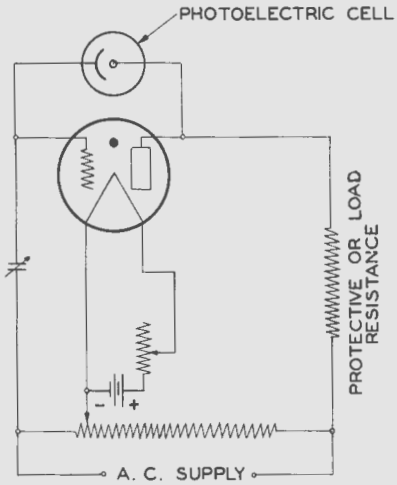

FIG. 7

1-C-39-6M
PRINTED IN U.S.A.

A development of Bell Telephone Laboratories, Incorporated, the research laboratories of the American Telephone and Telegraph Company and the Western Electric Company

V. T. DATA SHEET 297A
ISSUE 1