Western Electric

205E Vacuum Tube

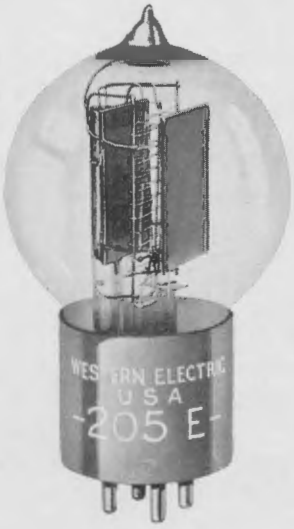

Classification—Moderate power, filamentary triode

The 205E tube is similar to the 205D tube except that special precautions have been taken in the 205E tube to minimize sputter noise in the tube and contact noise between the contact pins and the socket.

Applications

Audio-frequency amplifier or modulator where power outputs of approximately 1 watt or less are required.

Radio-frequency power amplifier.

Oscillator.

Dimensions—Dimensions, outline diagrams of the tube and base, and the arrangement of the electrode connections to the base terminals are shown in Figures 1 and 2.

Base—Medium, four-pin, bayonet type having special contact metal at the ends of the contact pins. The bayonet pin is offset.

Socket—Four-contact, bayonet-slot type, preferably provided with contact-metal contacts, such as the Western Electric 100M for front of panel mounting or 116A for rear of panel mounting.

Copyright 1936 Western Electric Company, Incorporated

Mounting Positions—Either vertical or horizontal. If mounted in a horizontal position, the plane of the filament, which is indicated in Figure 2, should be vertical.

Average Direct Interelectrode Capacitances

	A	B	C
Grid to plate, $\mu\mu f$	4.8	4.3	4.3
Grid to filament, $\mu\mu f$	5.2	6.4	6.9
Plate to filament, $\mu\mu f$	3.3	5.2	5.5

Column A—Based tube without socket.

Column B—Tube alone when measured in 100M socket mounted on metal plate; socket and mounting plate connected to filament.

Column C—Tube alone when measured in 116A socket mounted in metal plate; socket and mounting plate connected to filament.

Filament—Oxide-coated

Filament voltage	4.5 volts, a.c. or d.c.
Nominal filament current	1.6 amperes

The filament of this tube is designed to operate on a voltage basis and should be operated at as near the rated voltage as is practicable. When alternating-current filament supply is used, the grid and plate returns should be connected to a center tap on the secondary of the filament transformer.

Characteristics—Plate current charcteristics of a typical 205E tube are shown in Figure 3 as functions of grid voltage for several values of plate voltage. Corresponding amplification factor, plate resistance, and transconductance characteristics are given in Figures 4, 5, and 6, respectively. Plate current characteristics as functions of plate voltage for several values of grid voltage are shown in Figure 7. These characteristics are for direct-current filament supply with the grid and plate voltages measured from the negative end of the filament. When alternating-current filament supply is used, the same characteristics are applicable if 2.6 is added to the numerical value of each grid bias.

Microphonic Noise—With a plate voltage of 350 volts, a grid bias of −22.5 volts, and a load resistance of 100,000 ohms, the mean microphonic noise output level of 205E tube measured in a laboratory reference test set is 25 decibels below 1 volt. The range of levels of individual tubes extends from 16 to 33 decibels below 1 volt. Since microphonic noise depends on the type and intensity of the mechanical disturbance which produces it, the values given here are useful chiefly for comparison with the levels of other tubes which have been tested in the same way.

Sputter Noise—A particularly disagreeable type of noise, characterized by an unmusical crackling or sputtering sound, occurs in many vacuum tubes, sometimes as a result of slight mechanical agitation. The sputter noise spectrum covers a wide band and may be of appreciable intensity even at radio frequencies. Such noise is usually due either to discontinuously variable insulation leaks

between electrodes or to intermittent contacts involving conducting members such as filament supports which, at times of no contact, are insulated from other parts of the tube. Special precautions have been taken in the design of the 205E tube to eliminate this type of noise.

Limiting Conditions for Safe Operation

	Class A Amp.	*Class B R-F Amp.	Class C R-F Amp. or Osc.	*Class C R-F Amp. Plate Modulated
Maximum direct plate voltage	400	400	400	350 volts
Maximum direct plate current	50	35	50	40 milliamperes
Maximum plate dissipation	14	14	14	10 watts
Maximum direct grid current	—	10	10	10 milliamperes

*Carrier conditions for use with modulation factors up to 1.0.

Operating Conditions and Output

Class A—Amplifier or Modulator

Permissible operating grid and plate voltage for Class A operation are included within the area, ABCD, in Figure 3. Amplification factor, plate resistance, transconductance, and performance data are given in Table I for a number of typical operating conditions represented by selected points within this area. A less severe operating condition should be selected in preference to a maximum operating condition wherever possible. The life of the tube at maximum operating conditions may be shorter than at less severe conditions.

The performance data include the fundamental power output in milliwatts and the levels of the second and third harmonics in decibels below the fundamental for values of load resistance, R, equal to one, two, and in some cases three times the plate resistance, r_p. The peak value of the sinusoidal input voltage, E_{gm}, which gives the indicated power output, P_m, and harmonic levels, F_{2m} and F_{3m}, in each case, is numerically equal to the grid bias. For a smaller input voltage, E_g, the output and harmonic levels are given approximately by the following relations:

$$P = P_m \left(\frac{E_g}{E_{gm}}\right)^2$$

$$F_2 = F_{2m} + 20 \log_{10} \frac{E_{gm}}{E_g}$$

$$F_3 = F_{3m} + 40 \log_{10} \frac{E_{gm}}{E_g}$$

TABLE I

Plate Voltage	Grid Bias	Plate Current	Amplification Factor	Plate Resistance	Transconductance	Input Voltage	Load Resistance	Power Output	Second Harmonic	Third Harmonic
Volts	Volts	Milliamperes		Ohms r_p	Micromhos	Peak Volts	R	Milliwatts	db	db
200	− 6	22.5	7.4	4000	1840	6	$R = r_p$	60	35	65
							$R = 2r_p$	55	40	70
250	−22	9	6.9	6000	1160	22	$R = r_p$	500	18	33
							$R = 2r_p$	450	22	40
							$R = 3r_p$	380	26	47
250	−15	19	7.2	4350	1670	15	$R = r_p$	310	26	45
							$R = 2r_p$	280	30	55
250	−10	27.5	7.4	3800	1950	10	$R = r_p$	180	33	60
							$R = 2r_p$	160	38	65
250	− 5	37.5	7.5	3500	2150	5	$R = r_p$	50	40	70
							$R = 2r_p$	45	43	70
300	−30	8	6.7	6700	1000	30	$R = r_p$	800	15	28
							$R = 2r_p$	720	20	35
							$R = 3r_p$	600	24	42
300	−24	15.5	7.1	4800	1460	24	$R = r_p$	750	20	36
							$R = 2r_p$	670	25	45
300	−18	25	7.3	4000	1830	18	$R = r_p$	540	27	46
							$R = 2r_p$	480	31	55
350	−22.5	29	7.3	3800	1940	22.5	$R = r_p$	875	26	44
							$R = 2r_p$	800	30	50
375	−30	22	7.1	4300	1660	30	$R = r_p$	1300	20	36
							$R = 2r_p$	1200	26	45
*300	−10	41	7.4	3350	2220	10	$R = r_p$	200	37	65
							$R = 2r_p$	180	41	70
*350	−20	34	7.3	3600	2060	20	$R = r_p$	750	28	50
							$R = 2r_p$	675	32	55
*375	−24	32	7.3	3650	1990	24	$R = r_p$	1000	26	44
							$R = 2r_p$	900	30	55
*400	−29	30	7.2	3800	1890	29	$R = r_p$	1400	23	39
							$R = 2r_p$	1300	28	48

*Maximum operating conditions.

Class B—Amplifier

Radio telephone applications, particularly the amplification of a modulated carrier wave with a minimum of distortion. Typical carrier conditions for use with a modulation factor up to 1.0 are shown in Table II.

TABLE II

Direct Plate Voltage	Grid Bias	Direct Plate Current	Driving Voltage		Power Output		Effective Load Resistance	Peak Driving Power
			Carrier	A-F Peak	Carrier	A-F Peak		
Volts	Volts	Milli-amperes	Peak Volts	Volts	Watts	Watts	Ohms	Watts
350	−48	28	69	138	2.5	10	3100	1
400	−56	28	73	146	3.0	12	3700	1

Class C—Amplifier or Oscillator

Radio telegraph or other continuous-wave applications. Typical operating conditions are shown in Table III.

TABLE III

Direct Plate Voltage	Grid Bias	Direct Plate Current	Driving Voltage	Power Output	Effective Load Resistance	Driving Power
Volts	Volts	Milli-amperes	Peak Volts	Watts	Ohms	Watts
350	− 96	45	186	8.3	3750	1.3
400	−112	45	202	10.0	4500	1.5

Class C—Amplifier—Plate modulated

Radio telephone applications. Typical carrier conditions for use with modulation factors up to 1.0 are shown in Table IV.

TABLE IV

Direct Plate Voltage	Grid Bias	Direct Plate Current	Driving Voltage	Power Output	Effective Load Resistance	Driving Power
Volts	Volts	Milli-amperes	Peak Volts	Watts	Ohms	Watts
300	−120	35	205	6.0	4000	1.3
350	−144	35	229	7.1	5000	1.7

High Frequency Ratings

If the 205E tube is to be used at frequencies higher than 15 megacycles, the plate voltage and plate dissipation ratings given above should be reduced to avoid excessive high-frequency currents, excessive heating due to dielectric losses, and consequent injury to the tube. At the limiting frequency of 30 megacycles, the maximum ratings should be as follows:

Maximum plate voltage..... 300 volts
Maximum plate dissipation..... 10 watts
Maximum r-f grid current..... 3 amperes

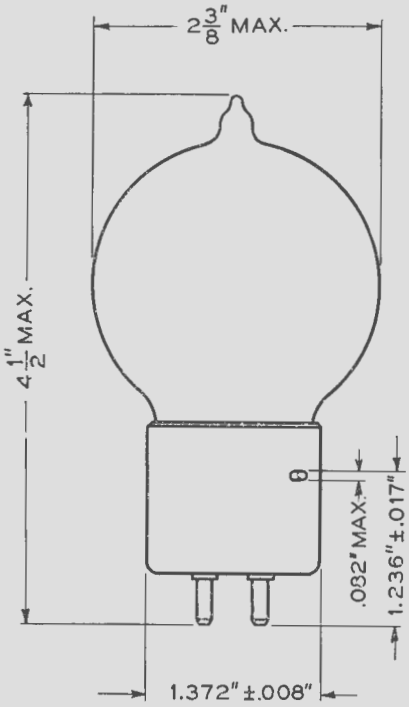

FIG. 1

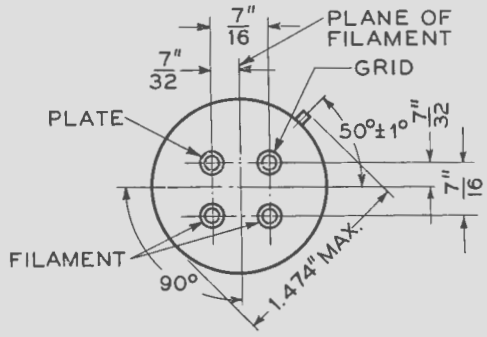

FIG. 2

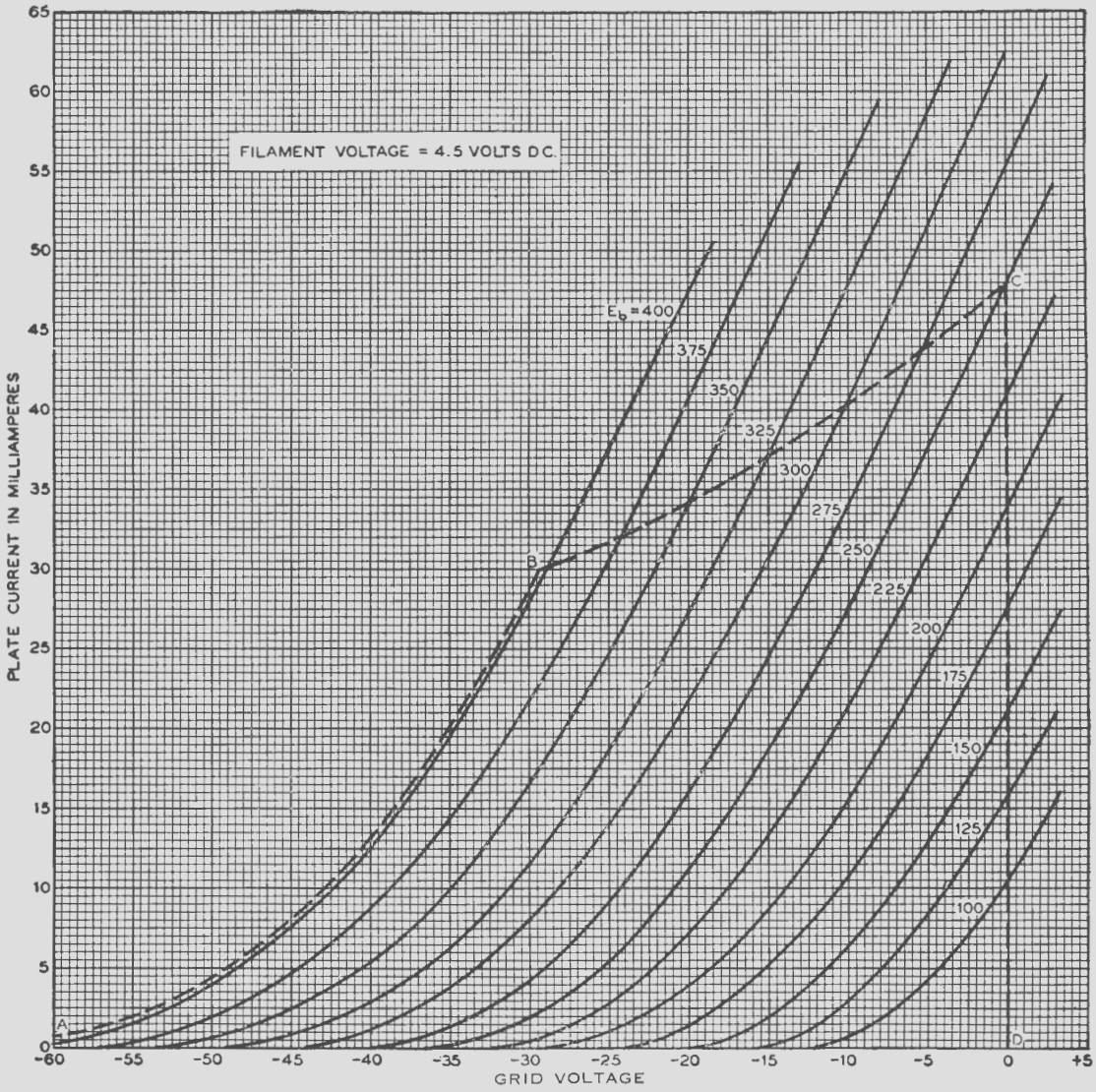

FIG. 3

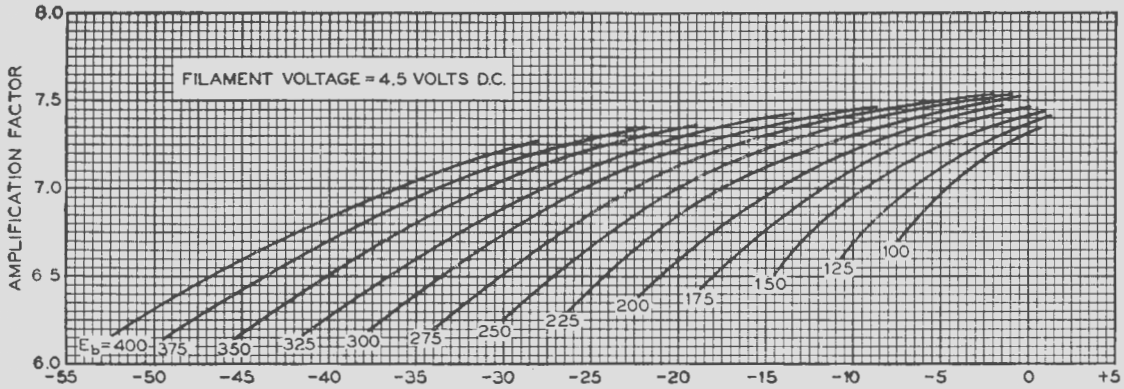

FIG. 4

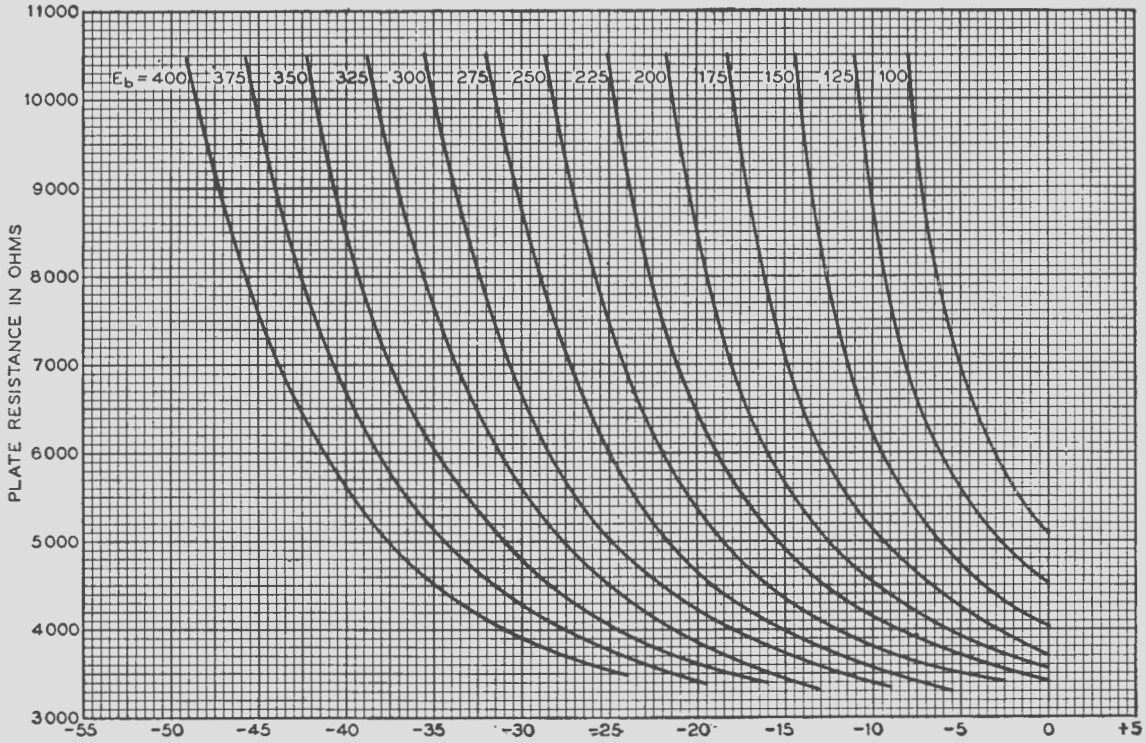

FIG. 5

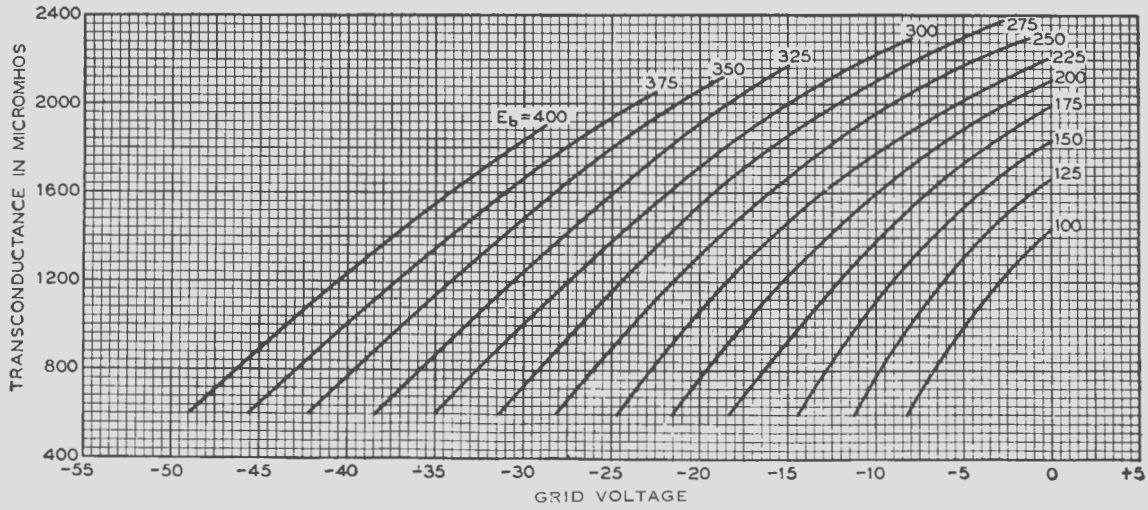

FIG. 6

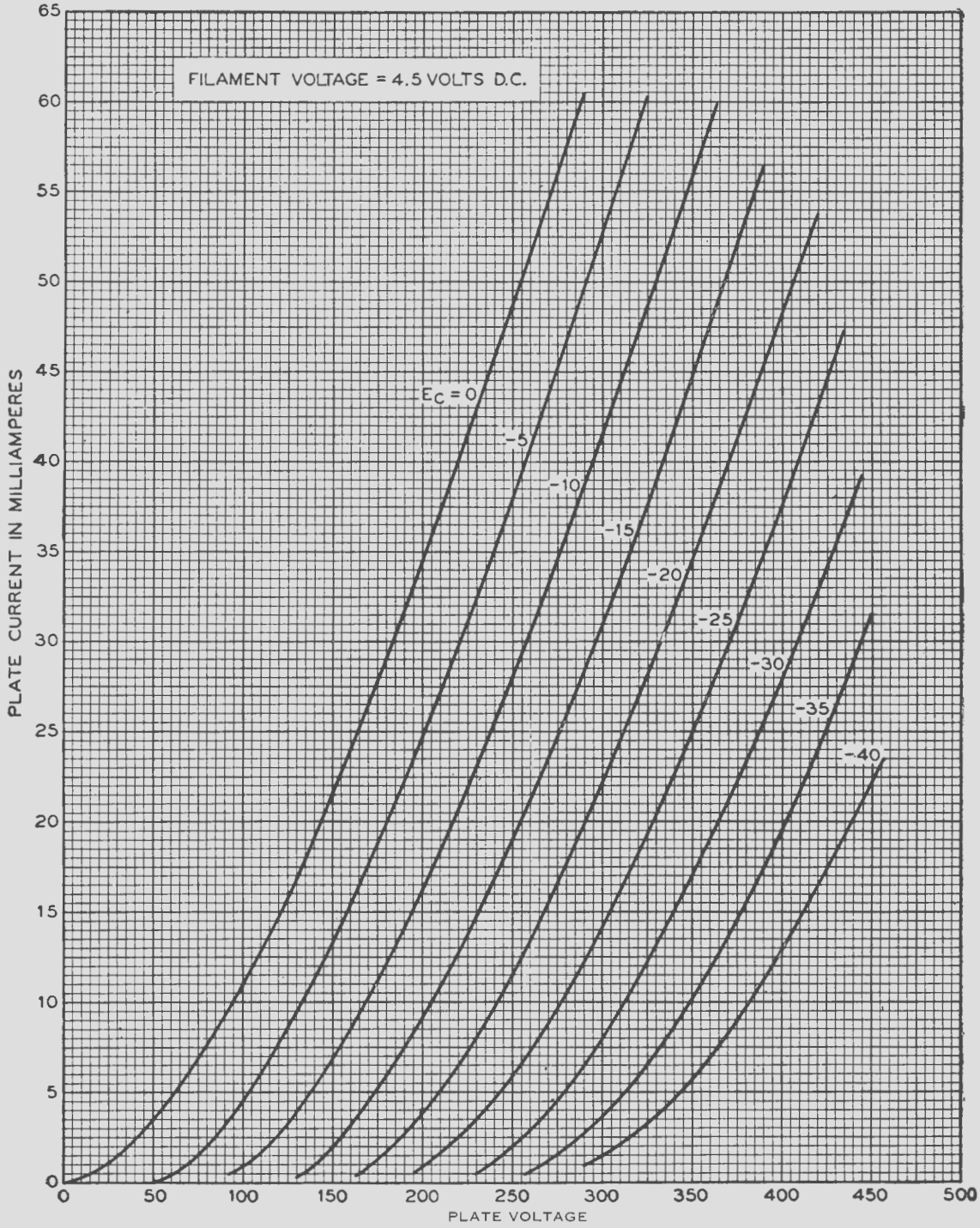

FIG. 7

1-C-36-3M
PRINTED IN U.S.A.

A development of Bell Telephone Laboratories, Incorporated, the research laboratories of the American Telephone and Telegraph Company, and the Western Electric Company

V. T. DATA SHEET 205E
ISSUE 1