Western Electric

259B Vacuum Tube

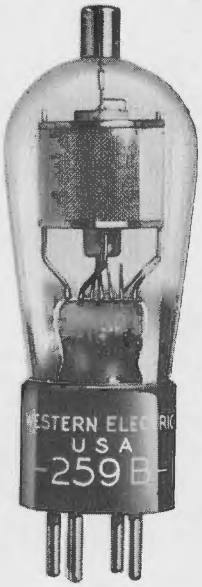

Classification—Voltage amplifier, screen-grid tetrode with indirectly heated cathode

The 259B tube has the same dimensions and characteristics as the 259A, but is designed to minimize audio-frequency disturbances arising in the tube.

Applications

Screen-grid high-frequency amplifier.

Audio-frequency amplifier for applications where exceptionally low tube noise is required. For other applications the 259A tube is appropriate.

Detector.

Dimensions—Dimensions, outline diagrams of the tube and base, and the arrangement of the electrode connections to the base terminals are shown in Figures 1 and 2.

Base—Medium five-pin base with bayonet pin; and a small metal cap control-grid terminal at the top of the bulb.

Socket—Standard five-contact type, such as the Western Electric 141A socket.

Mounting Positions—The 259B tube may be mounted in any position.

Copyright 1936 Western Electric Company, Incorporated

Average Direct Interelectrode Capacitances

Control grid to plate	0.004 μμf.
Control grid to heater, cathode, and screen grid	5.8 μμf.
Plate to heater, cathode, and screen grid	14.0 μμf.

Heater Rating and Supply

Heater voltage	2.0 volts a.c. or d.c.
Nominal heater current	1.6 amperes

The heater element of this tube is designed to operate on a voltage basis and should be operated at as near the rated voltage as practicable.

Cathode Connection—Preferably direct to the heater. If voltage must be applied between heater and cathode, it should be kept as low as possible and should never exceed 90 volts.

Characteristics—Plate-current and screen-grid current characteristics of a typical 259B tube are given as functions of plate voltage in Figures 3 and 4, for screen-grid voltages of 75 and 90 volts, respectively. The same quantities are shown as functions of control-grid bias in Figures 5 and 6. Transconductance characteristics for a plate voltage of 180 volts are shown in Figure 7. For other plate voltages between 135 and 250 volts, the transconductance of a typical tube, for values higher than 100 micromhos, does not differ by more than ±3 per cent from its value at 180 volts. The amplification-factor and plate-resistance characteristics corresponding to Figure 5 are given in Figures 8, 9, 10, and 11.

Typical Operating Conditions

Plate Voltage	Screen-Grid Voltage	Control-Grid Bias	Plate Current	Screen-Grid Current	Amplification Factor	Plate Resistance	Transconductance
Volts	Volts	Volts	Milliamperes	Milliamperes		Ohms	Micromhos
135	75	−1.5	5.3	1.4	400	300,000	1,330
180	75	−1.5	5.5	1.2	550	400,000	1,380
*180	90	−1.5	7.5	1.7	480	320,000	1,500
*250	75	−1.5	5.7	1.1	610	430,000	1,420

*Maximum operating conditions.

Circuit Requirements—In order to make use of the high gain per stage which is obtainable with the 259B tube, special precautions must be taken in high-frequency, multi-stage amplifiers, to eliminate feed-back in the associated circuit. In order to do this effectively, it is usually necessary to use shielding between successive stages, a close-fitting shield around each tube, and a resistance or choke coil in the screen-grid lead of each tube. When such an impedance is used in the screen-grid lead, a low-impedance condenser should be connected from the screen grid to the cathode. Impedances common to two or more plate or grid circuits should be avoided.

The screen-grid voltage should be obtained directly from a low resistance source or through a voltage divider. The use of a series resistance to reduce a high voltage supply to the desired value is not recommended because screen-grid currents differ widely in different tubes and vary during life in individual tubes.

Microphonic Noise—With a plate voltage of 180 volts, a screen-grid voltage of 75 volts, a control-grid bias of −1.5 volts, and a load resistance of 100,000 ohms, the mean microphonic noise output level of the 259B tube, measured in a laboratory reference test set, is 20 db below 1 volt. The range of levels of individual tubes extends from 2 to 36 db below 1 volt. Since microphonic noise output depends on the type and intensity of the mechanical disturbance which produces it, the values given here are useful chiefly for comparison with the levels of other tubes which have been tested in the same way.

Low Level Audio-Frequency Amplification—The 259B tube has been specially designed to eliminate the microphonic noise impulses which sometimes occur spontaneously at random intervals in tubes of this general type. When the tube is well shielded from external microphonic noise impulses, it is exceptionally quiet in operation and can be used for the audio-frequency amplification of exceptionally low level signals. For the highest signal-to-noise ratio in such applications, the screen-grid and plate voltages should be reduced to about 22.5 and 100 volts, respectively. For ion counters or other applications where the control grid is left floating, most quiet operation is obtained with screen-grid and plate voltages of about 16.5 and 30 volts, respectively, and a reduced value of heater voltage. Under such conditions, the limiting noise is the thermal agitation noise in the input resistance of the tube added to the shot-effect noise from the residual grid current.

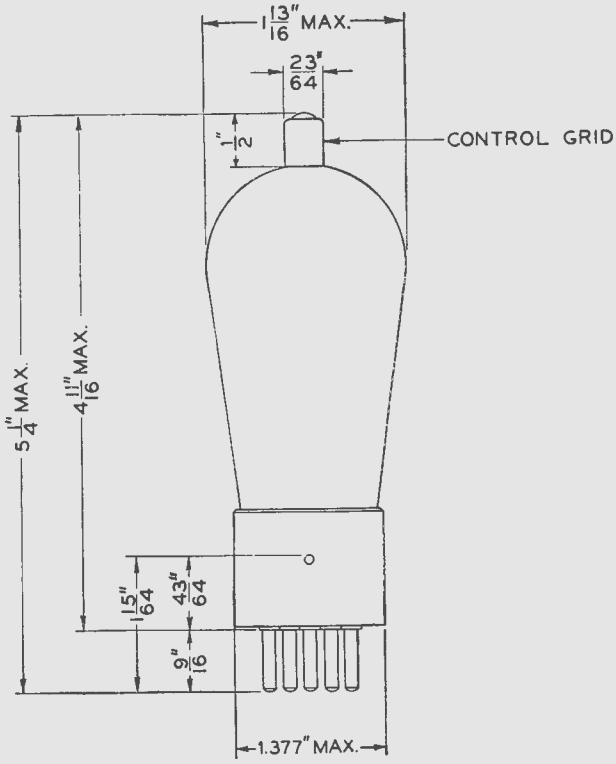

FIG. 1

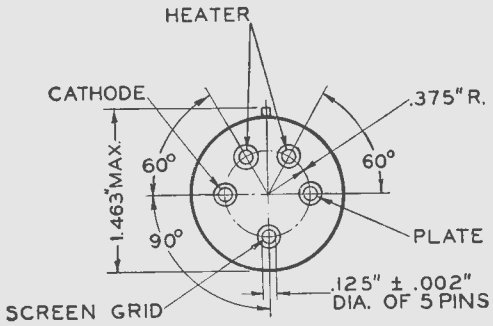

FIG. 2

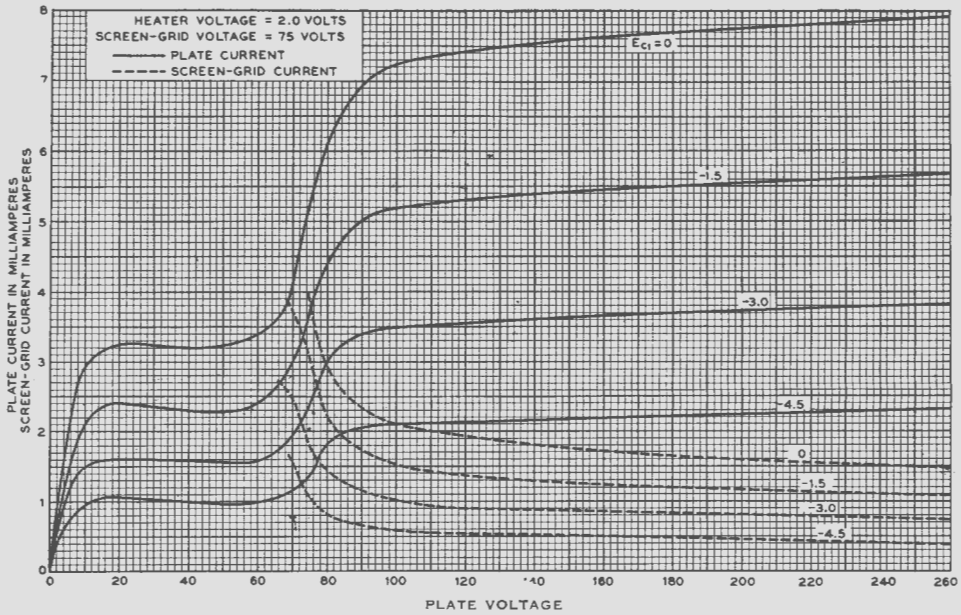
HEATER VOLTAGE = 2.0 VOLTS
SCREEN-GRID VOLTAGE = 75 VOLTS
PLATE CURRENT
SCREEN-GRID CURRENT
$E_{c1}=0$
-1.5
-3.0
-4.5
0
-1.5
-3.0
-4.5
PLATE CURRENT IN MILLIAMPERES
SCREEN-GRID CURRENT IN MILLIAMPERES
PLATE VOLTAGE

FIG. 3

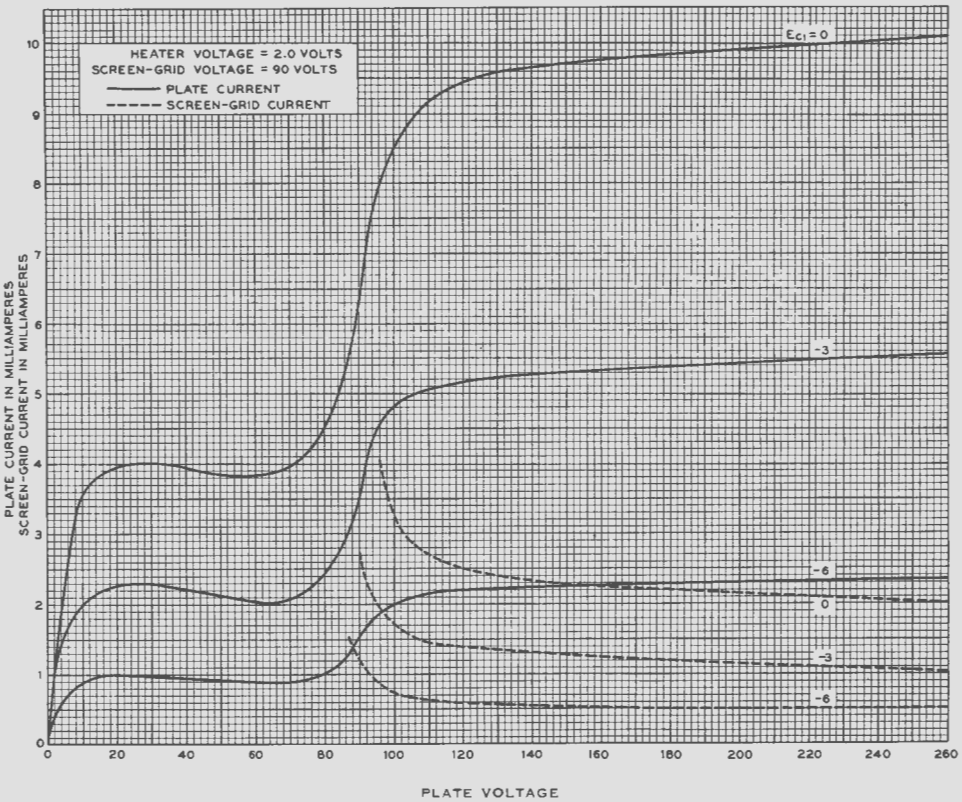
HEATER VOLTAGE = 2.0 VOLTS
SCREEN-GRID VOLTAGE = 90 VOLTS
PLATE CURRENT
SCREEN-GRID CURRENT
$E_{c1}=0$
-3
-6
0
-3
-6
PLATE CURRENT IN MILLIAMPERES
SCREEN-GRID CURRENT IN MILLIAMPERES
PLATE VOLTAGE

FIG. 4

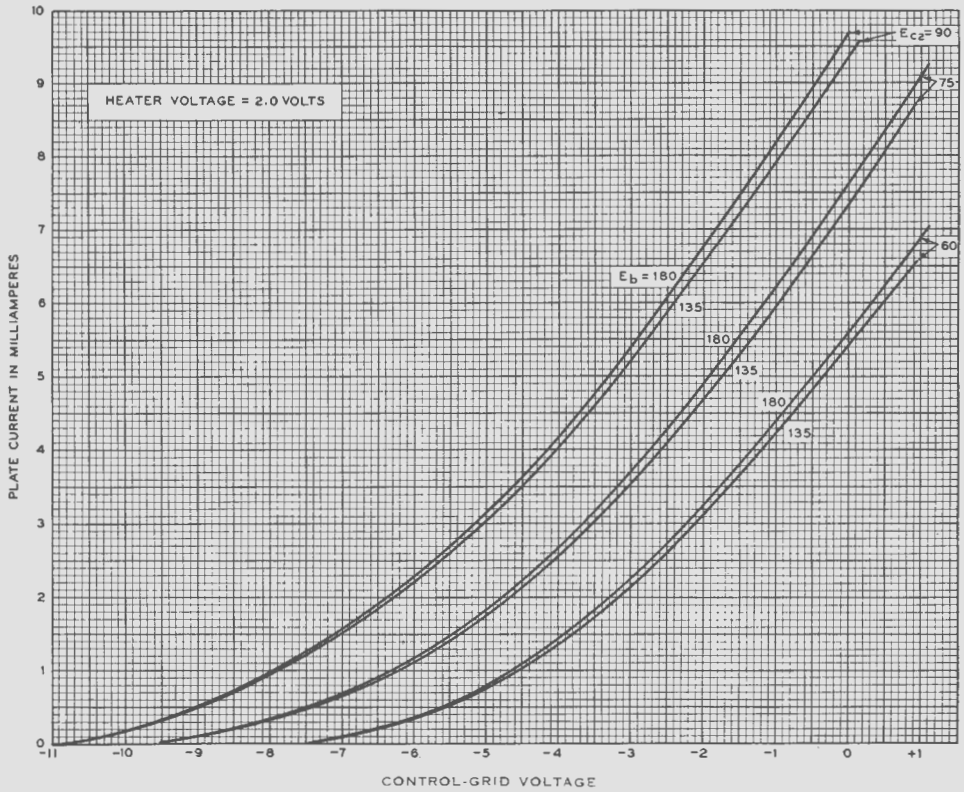
HEATER VOLTAGE = 2.0 VOLTS
PLATE CURRENT IN MILLIAMPERES
CONTROL-GRID VOLTAGE
E_{c2} = 90
75
60
E_b = 180
135
180
135
180
135
0
1
2
3
4
5
6
7
8
9
10
-11
-10
-9
-8
-7
-6
-5
-4
-3
-2
-1
0
+1

FIG. 5

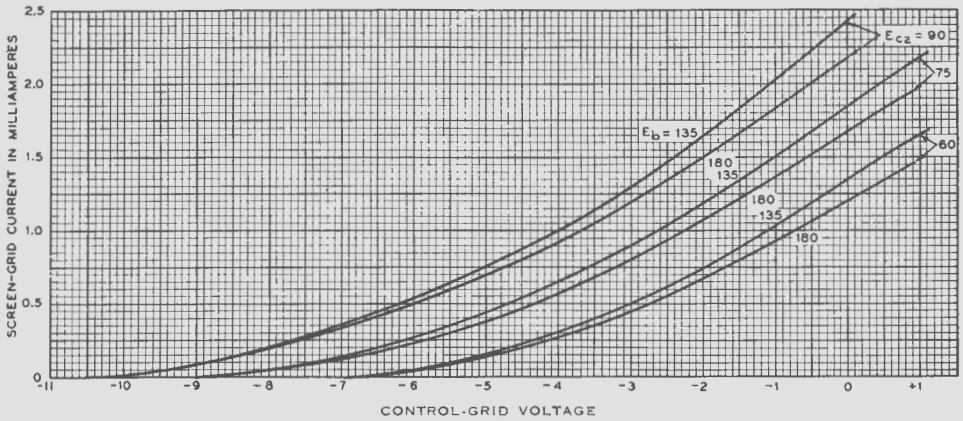
SCREEN-GRID CURRENT IN MILLIAMPERES
CONTROL-GRID VOLTAGE
E_{c2} = 90
75
60
E_b = 135
180
135
180
135
180
0
0.5
1.0
1.5
2.0
2.5
-11
-10
-9
-8
-7
-6
-5
-4
-3
-2
-1
0
+1

FIG. 6

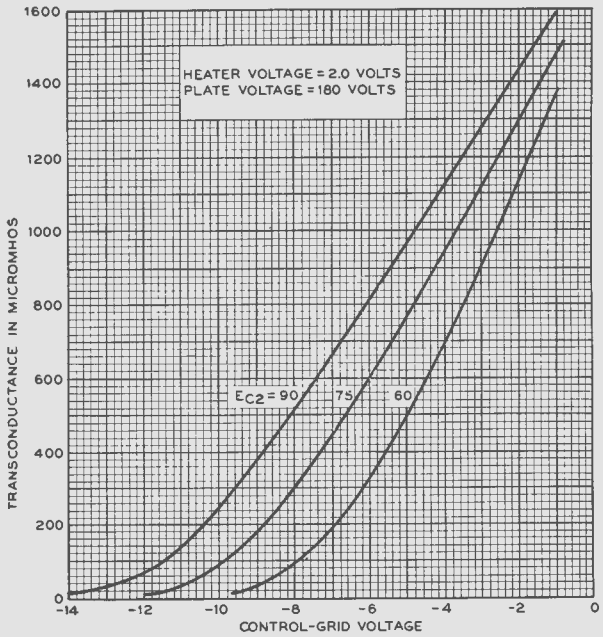

FIG. 7

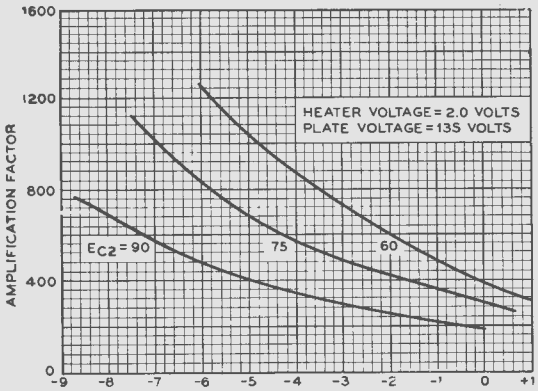

FIG. 8

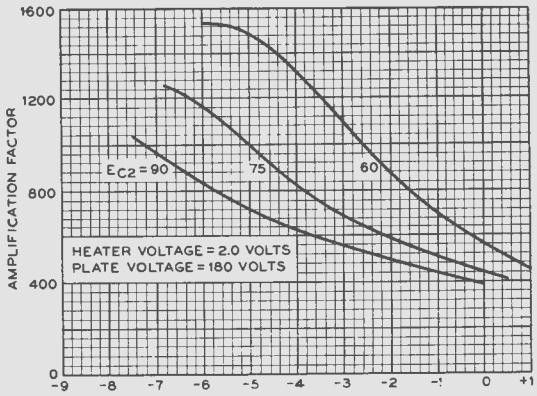

FIG. 10

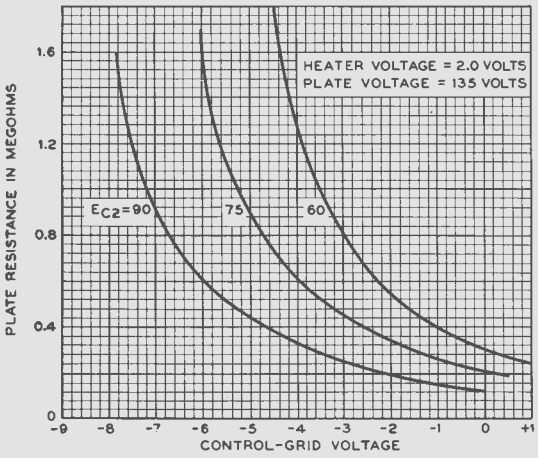

FIG. 9

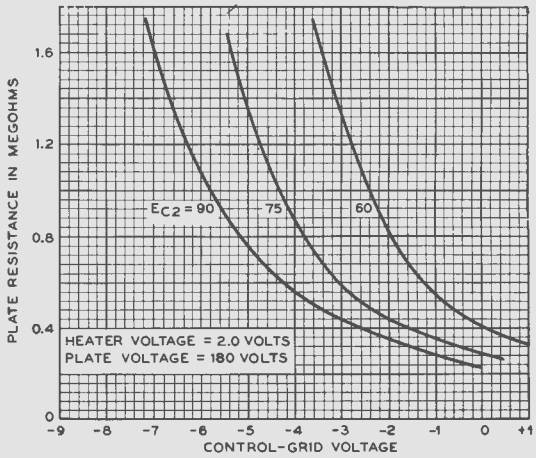

FIG. 11

1-C-36-53C
PRINTED IN U.S.A.

A development of Bell Telephone Laboratories, Incorporated, the research laboratories of the American Telephone and Telegraph Company, and the Western Electric Company

V. T. DATA SHEET 259B
ISSUE 1