Western Electric

384A and 385A Vacuum Tubes

384A

385A

Classification—Voltage Amplifier, Suppressor-Grid Pentodes with Indirectly Heated Cathodes

The 384A and 385A vacuum tubes are identical except that the 385A is provided with a base.

Applications—These tubes are intended primarily for miscellaneous low-power applications at audio, carrier, and ultra-high frequencies. The connection for the suppressor-grid is brought out to an external terminal.

Dimensions—Figures 1, 2, 3 and 4 show dimensions, outline diagrams of the tubes and the arrangement of the electrode connections.

Base—384A—Not based or capped. Connections are made by soldering the leads directly to the circuit elements.

385A—Six-pin, short-shell, intermediate, octal type with silver-plated pins. Small metal cap plate terminal at the top of the bulb.

Socket—384A—No socket is required. Ordinarily, no additional support other than that of the leads will be required. Where the tube is subjected to vibration or where a definite orientation of the tube is desired, a felt-covered spring clip, bearing against the top of the bulb to hold the tube firmly in a circular seat located under the shoulder of the tube, may be provided.

385A—Standard octal type socket, preferably provided with silver-plated contacts.

Mounting Positions—The tubes may be mounted in any position.

Copyright 1941 Western Electric Company, Incorporated

Average Direct Inter-Electrode Capacitances

	384A	385A
Control-grid to plate	0.02	0.02 μμf
Control-grid to heater, cathode, screen-grid and suppressor-grid	3.1	3.6 μμf
Plate to heater, cathode, screen-grid and suppressor-grid	2.1	2.4 μμf

384A—The control-grid to plate capacitance is measured with the tube resting in a circular seat consisting of a one-inch-diameter hole in a metal sheet located under the shoulder of the tube. The metal sheet is connected to the cathode of the tube.

No shielding is used in the measurement of the input and output capacitances.

385A—The control-grid to plate capacitance is measured with the tube in an octal wafer socket located approximately one-half inch above a metal sheet. A close fitting metal shield is placed around the bulb and base of the tube and connected, together with the metal sheet, to the cathode. The lead from the control-grid terminal of the socket is brought through a small opening in the metal sheet.

No shielding or socket is used in the measurement of the input and output capacitances.

Heater Rating

Heater voltage	6.3 volts, a-c or d-c
Nominal heater current	0.15 ampere

The heaters of these tubes are designed to operate on a voltage basis and should be operated as near the rated voltage as practicable.

Cathode Connection—Where alternating heater voltage is used, the cathode should preferably be connected directly to the mid-point of the heater transformer winding or to the mid-point of a low resistance connected across the heater terminals. For direct current operation the cathode may be connected to either end of the heater. If voltage is applied between the heater and cathode, it should be kept low and must not exceed 50 volts.

Characteristics—Figures 5 and 6 show plate current and screen-grid current characteristics of typical tubes as functions of control-grid voltage for several values of screen-grid and plate voltage and zero suppressor-grid voltage. The screen-grid voltage for these characteristics is equal to the plate voltage. Figures 7, 8 and 9 show corresponding amplification factor, plate resistance, and transconductance characteristics. Figures 10 and 11 show plate current and screen-grid current characteristics as functions of plate voltage for three values of control-grid voltage, a screen-grid voltage of 120 volts, and zero suppressor-grid voltage. Figures 12, 13 and 14 show corresponding amplification factor, plate resistance, and transconductance characteristics.

Limiting Conditions for Safe Operation

Maximum plate voltage	250 volts
Maximum screen-grid voltage	120 volts
Maximum suppressor-grid voltage	120 volts
Maximum cathode current (total space current)	12 milliamperes
Maximum screen-grid current	5 milliamperes

Operating Conditions and Output—Nominal performance data are given in the table below for a number of typical operating conditions. Since the life of the tubes may be shortened when operated under the maximum conditions, less severe conditions should be selected wherever possible.

The performance data include the fundamental power output and the second and third harmonic levels for the indicated values of load resistance and input voltage. The power output is given in dbm (decibels above one milliwatt), and the harmonic levels in decibels below the fundamental.

TABLE

Plate Voltage	Screen-Grid Voltage	Control-Grid Bias	Sup-pressor-Grid Voltage	Plate Current	Load Resistance	Input Voltage	Output Power	Second Har-monic	Third Har-monic
Volts	Volts	Volts	Volts	Milli-amperes	Ohms	Peak Volts	dbm	db	db
120	120	−2	0	5.6	1,000	0.5	−1	35	69
					1,000	2.0	11	22	42
					10,000	0.5	9	37	66
					10,000	2.0	21	24	38
					30,000	0.5	13	46	59
					30,000	2.0	23	28	23
					60,000	0.5	15	36	45
					60,000	2.0	23	12	21
					100,000	0.5	17	25	37
					100,000	2.0	23	10	29
180	120	−2	0	5.7	10,000	0.5	9	36	69
					10,000	2.0	21	23	39
					30,000	0.5	14	40	68
					30,000	2.0	25	31	31
250*	120*	−2	0	5.7	10,000	0.5	9	36	68
					10,000	2.0	21	23	40
					30,000	0.5	14	37	67
					30,000	2.0	25	26	34

*Maximum voltages.

Curves showing the fundamental power output and the second and third harmonic levels as functions of input voltage for a number of values of load resistance and a typical operating condition are given in Figures 15, 16 and 17.

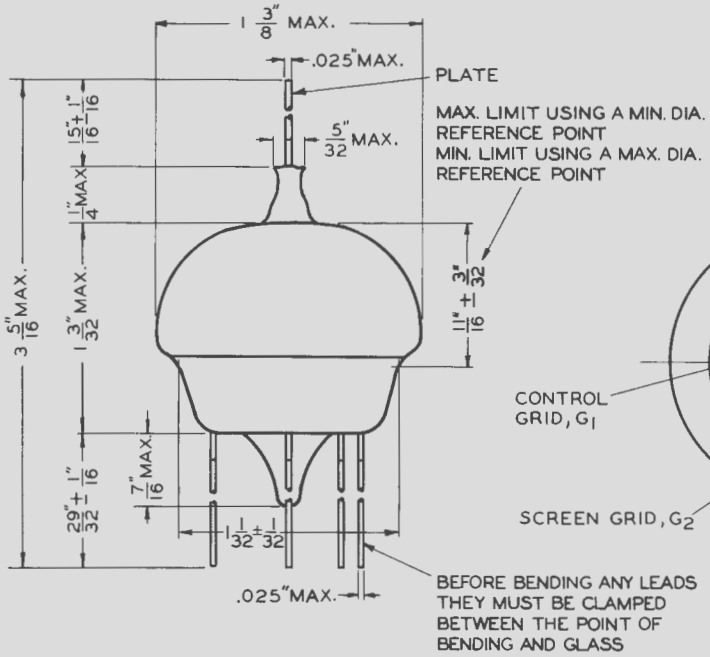

FIG. 1

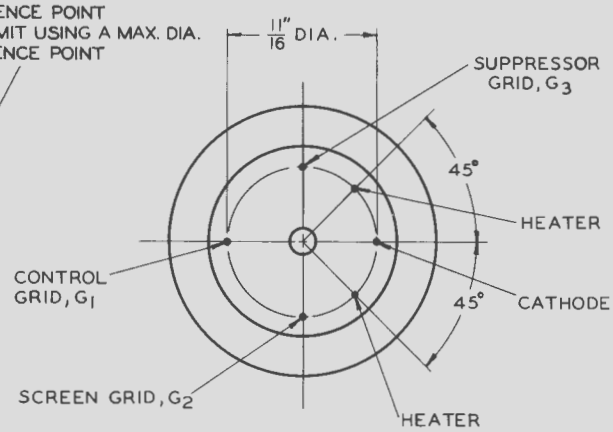

FIG. 2

384 A

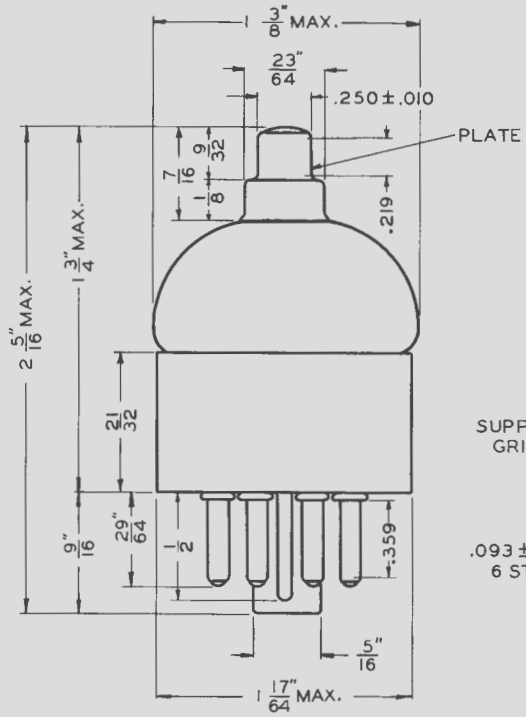

FIG. 3

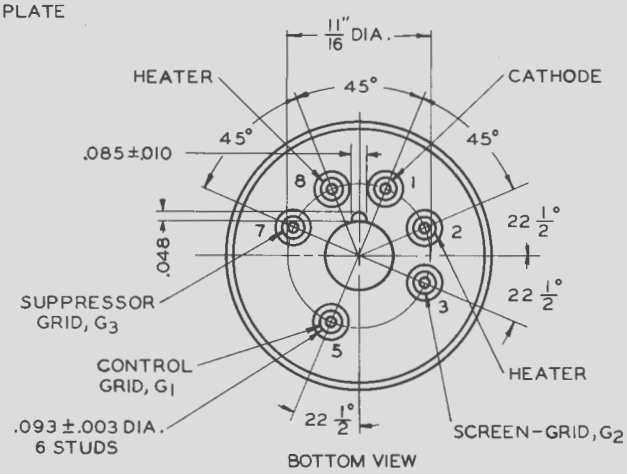

FIG. 4

385 A

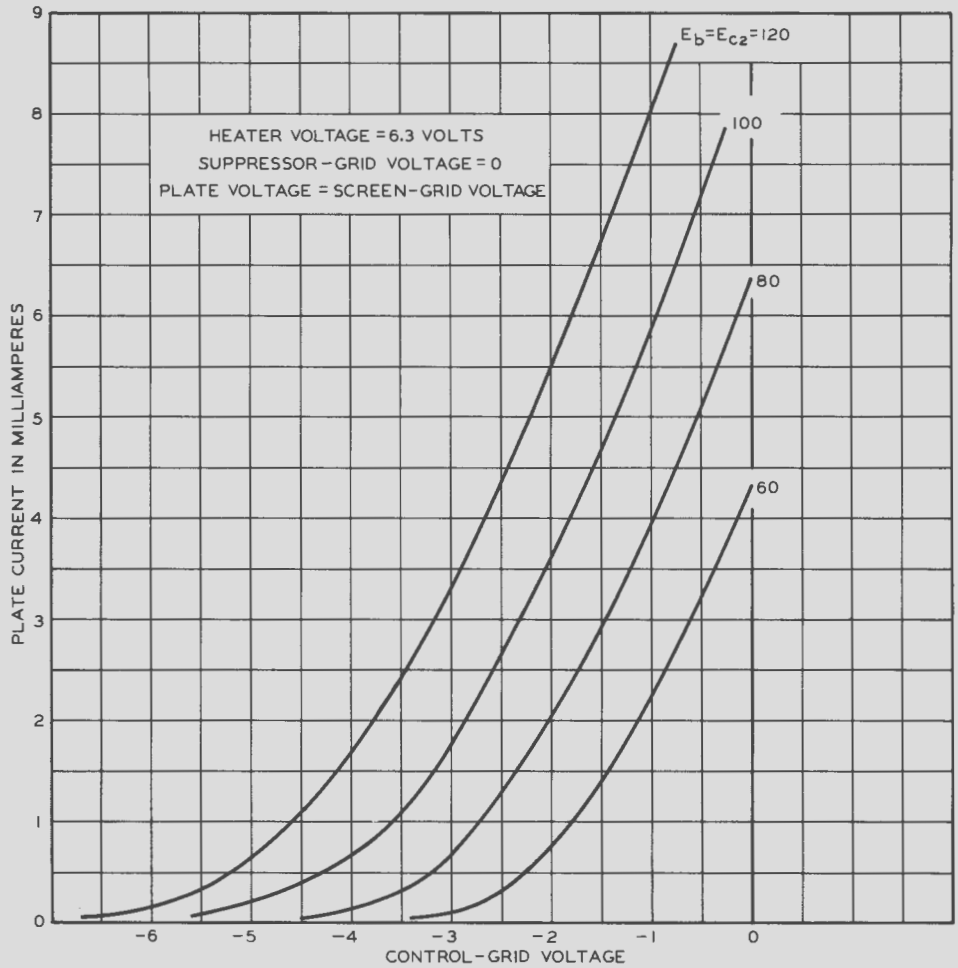
HEATER VOLTAGE = 6.3 VOLTS
SUPPRESSOR-GRID VOLTAGE = 0
PLATE VOLTAGE = SCREEN-GRID VOLTAGE
$E_b = E_{c2} = 120$
100
80
60
PLATE CURRENT IN MILLIAMPERES
CONTROL-GRID VOLTAGE
0
1
2
3
4
5
6
7
8
9
-6
-5
-4
-3
-2
-1
0

FIG. 5

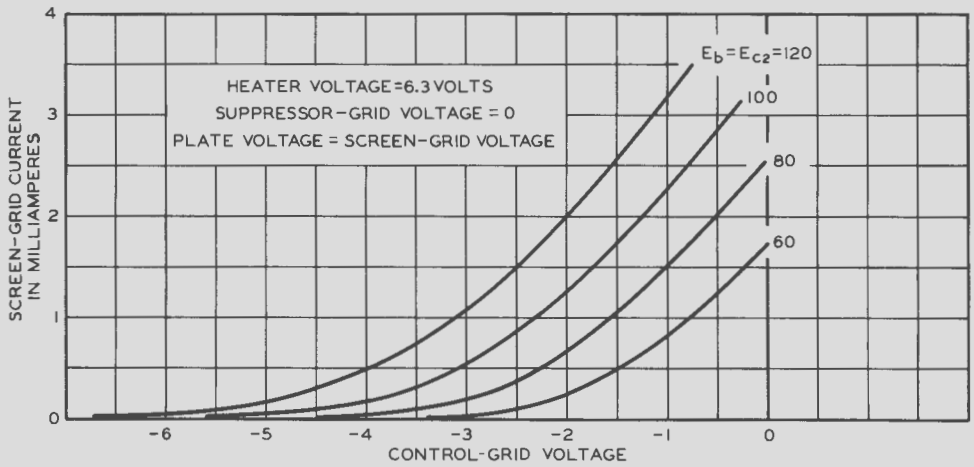
HEATER VOLTAGE = 6.3 VOLTS
SUPPRESSOR-GRID VOLTAGE = 0
PLATE VOLTAGE = SCREEN-GRID VOLTAGE
$E_b = E_{c2} = 120$
100
80
60
SCREEN-GRID CURRENT IN MILLIAMPERES
CONTROL-GRID VOLTAGE
0
1
2
3
4
-6
-5
-4
-3
-2
-1
0

FIG. 6

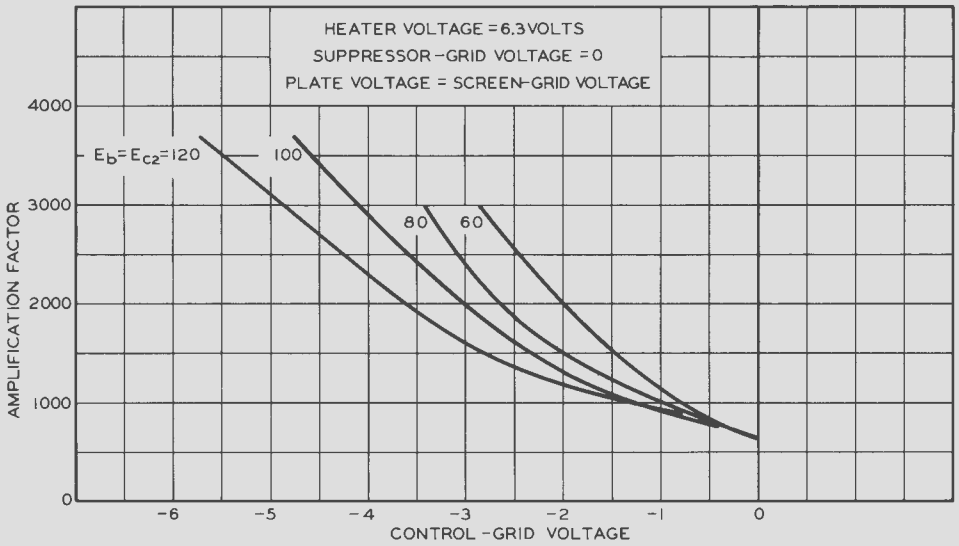

FIG. 7

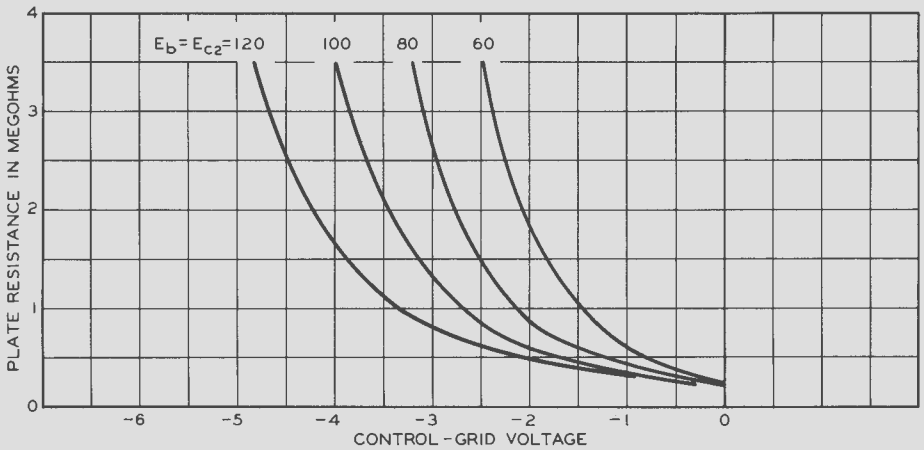

FIG. 8

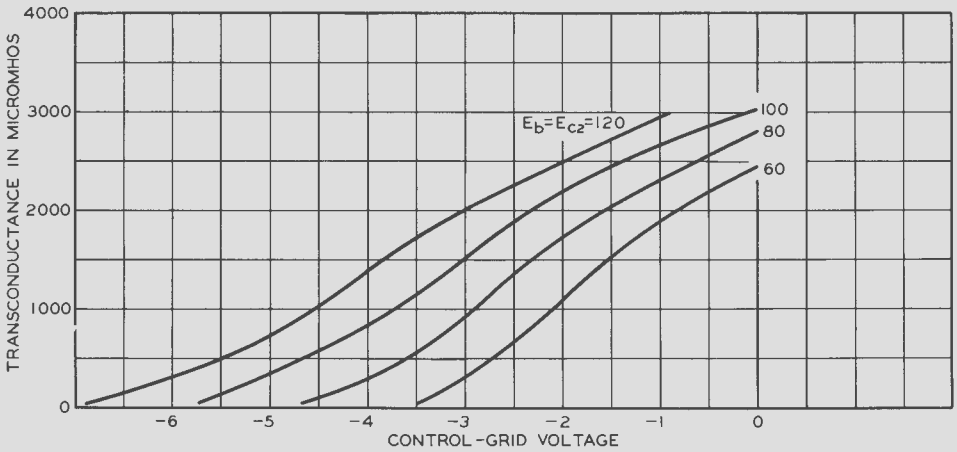

FIG. 9

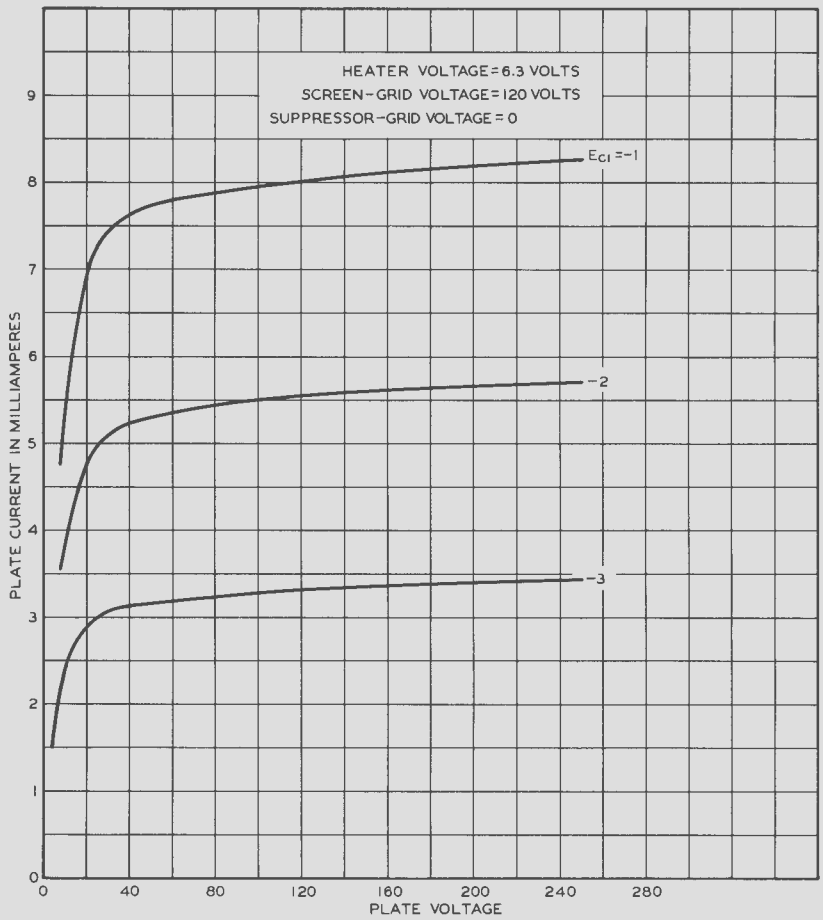
HEATER VOLTAGE = 6.3 VOLTS
SCREEN-GRID VOLTAGE = 120 VOLTS
SUPPRESSOR-GRID VOLTAGE = 0
E_{C1} = -1
-2
-3
PLATE CURRENT IN MILLIAMPERES
0
1
2
3
4
5
6
7
8
9
0
40
80
120
160
200
240
280
PLATE VOLTAGE

FIG. 10

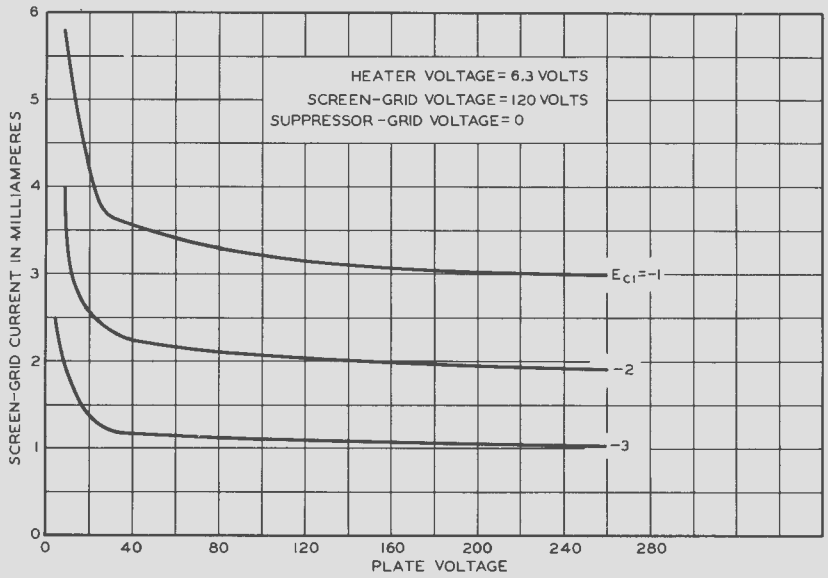
HEATER VOLTAGE = 6.3 VOLTS
SCREEN-GRID VOLTAGE = 120 VOLTS
SUPPRESSOR-GRID VOLTAGE = 0
E_{C1} = -1
-2
-3
SCREEN-GRID CURRENT IN MILLIAMPERES
0
1
2
3
4
5
6
0
40
80
120
160
200
240
280
PLATE VOLTAGE

FIG. 11

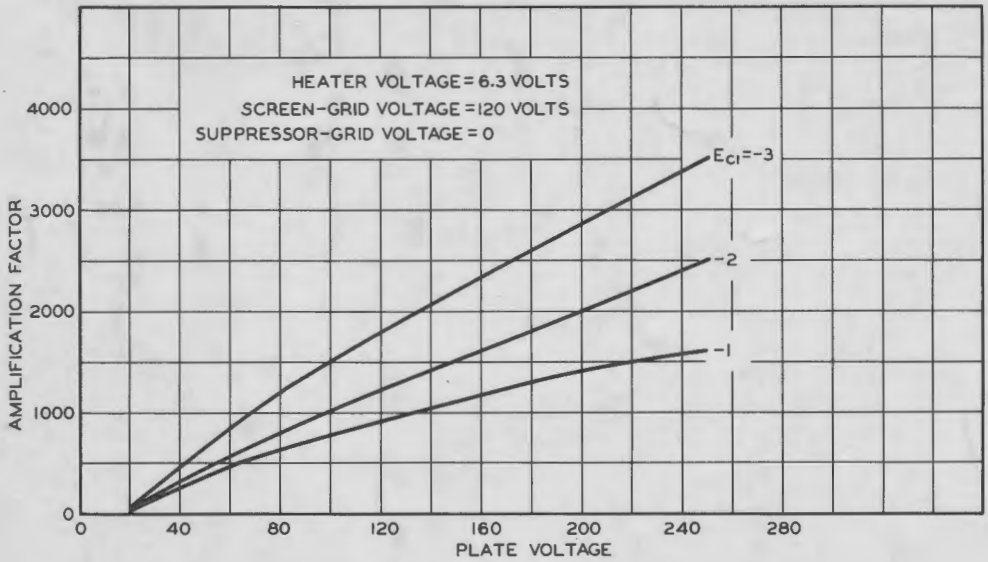

FIG. 12

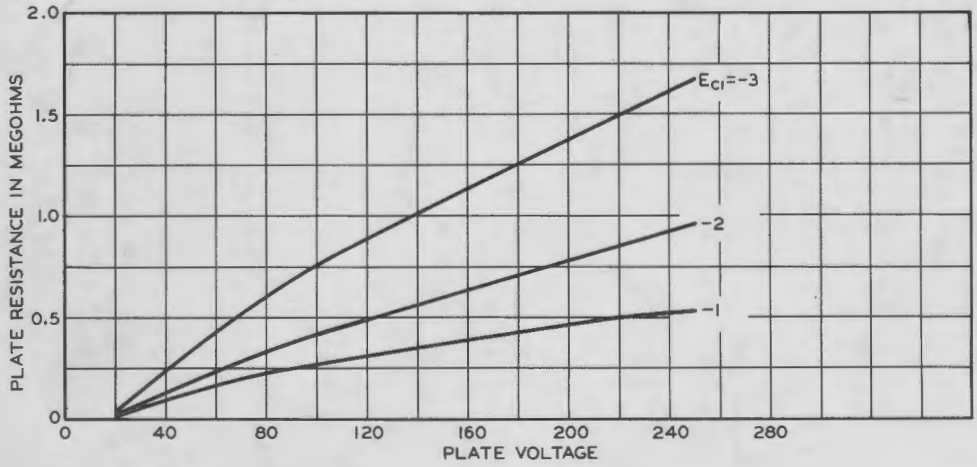

FIG. 13

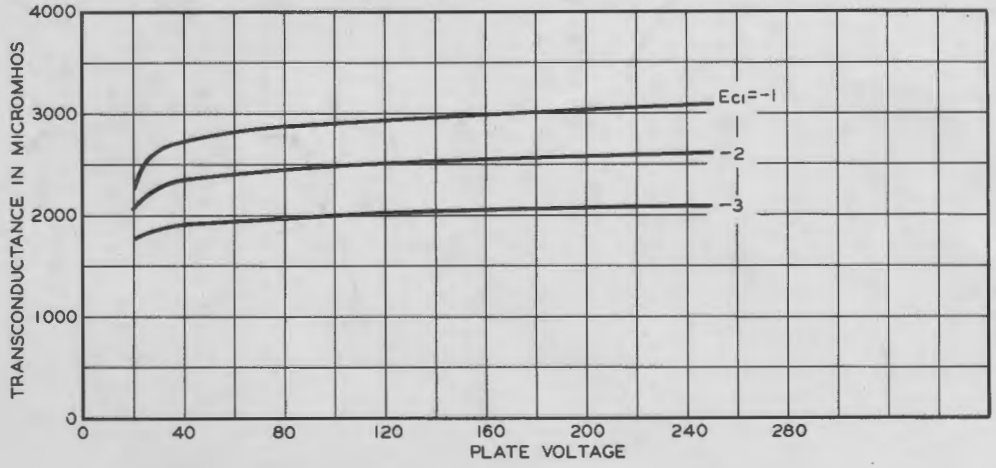

FIG. 14

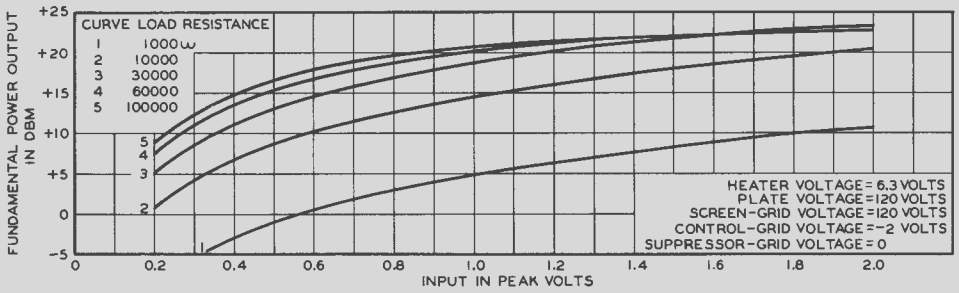

FIG. 15

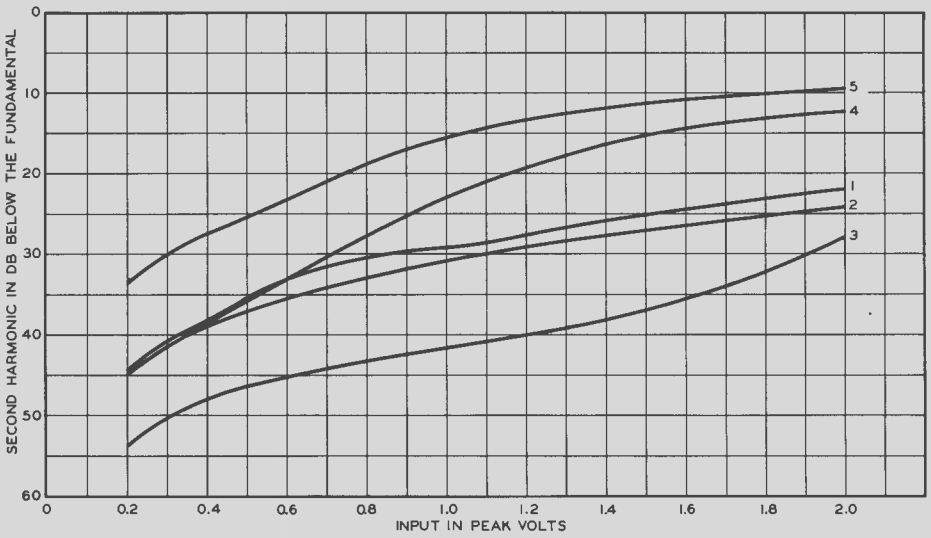

FIG. 16

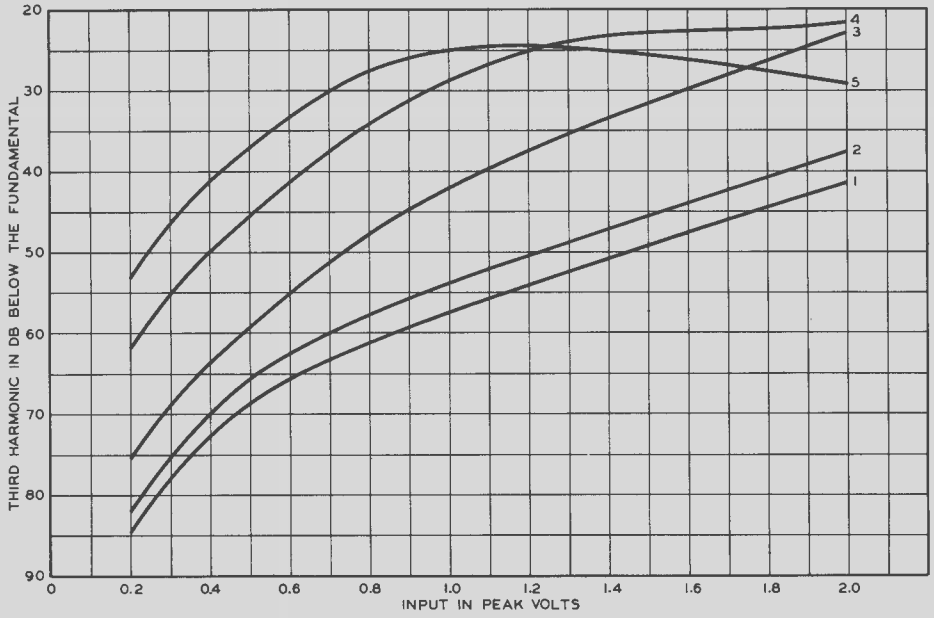

FIG. 17

Western Electric

1-D-41-4-M
PRINTED IN U.S.A.

A development of Bell Telephone Laboratories, Incorporated, the research laboratories of the American Telephone and Telegraph Company, and the Western Electric Company

V. T. DATA SHEET 384A 385A
ISSUE 1