Western Electric

371A and 378A Vacuum Tubes

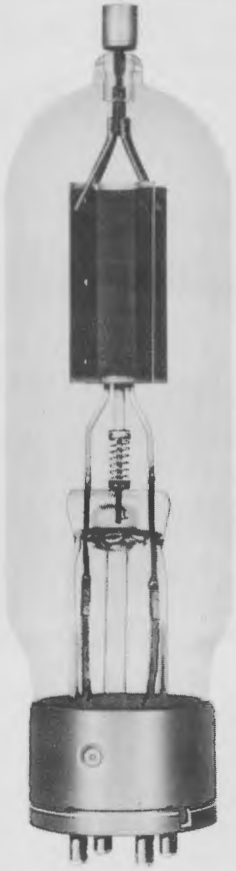

371A

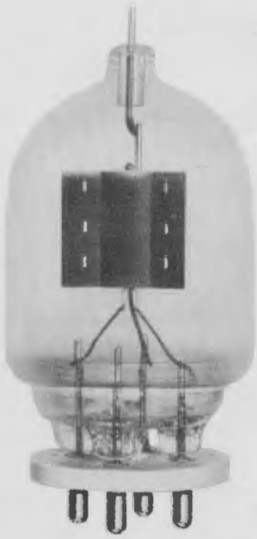

378A

Classification—High Vacuum Filamentary Diodes

These tubes are designed to supply direct current from an alternating current source. They are particularly adapted to use in high voltage circuits where the operating conditions preclude the use of gas-filled or mercury vapor tubes.

Dimensions—Figure 1 for the 371A and Figure 2 for the 378A show the dimensions, outline diagrams and arrangements of the electrode connections. The overall dimensions are:

	371A	378A
Maximum overall length	$8\frac{3}{4}''$	$5\frac{1}{16}''$
Maximum diameter	$2\frac{5}{16}''$	$2\frac{5}{16}''$

Bases and Mountings—The 371A tube is provided with a large four-pin, bayonet type base suitable for mounting in a Western Electric 148A or similar socket.

The 378A is provided with a special four-pin, wafer type base suitable for mounting in a Western Electric 152A or similar socket.

Copyright, 1941, Western Electric Company, Incorporated

The tubes should be mounted in vertical positions.

The anode terminals on these tubes project from the tops of the bulbs. Connections to these terminals should be made by means of spring clips attached to flexible leads which must not touch the glass bulbs. When high voltages are used some type of corona shield may be necessary at these terminals. The unused base pins and the base shell of the 371A should be connected to one filament terminal in the socket.

The unused base pin of the 378A should be connected to one filament terminal in the socket. No connection to the filament center tap pin need be made when the full filament is used. When half filament is used no connection need be made to the unused terminal.

The 378A tube may be operated using only half the filament at 2.5 volts, 5 amperes, but it is not recommended that the two halves be operated in parallel at 2.5 volts, 10 amperes.

Filaments—Thoriated Tungsten

		378A	
	371A	Full Filament	Half Filament
Filament voltage	5.0	5.0	2.5 volts a-c or d-c
Nominal filament current	10.3	5.0	5.0 amperes
Average thermionic emission	2.0	1.0	0.4 ampere

Characteristics—The following characteristics are based on a typical tube. Variations can be expected with different tubes.

		378A	
	371A	Full Filament	Half Filament
At a plate current of	0.5	0.200	0.100 ampere
Plate voltage	160	200	180 volts
Dynamic plate resistance	230	800	1200 ohms

Figure 3 for the 371A and Figure 4 for the 378A show the plate voltage-plate current characteristics for average tubes.

Interelectrode Capacities

	371A (Base shell connected to filament)	378A
Plate to filament	4.0	1.7 $\mu\mu f$

Operation

Maximum Ratings

		378A	
	371A	Full Filament	Half Filament
Maximum peak inverse voltage	25,000	30,000	30,000 volts
Maximum d-c plate current	0.25	0.10	0.05 ampere

Operating Precautions

Mechanical—The tubes should not be subject to vibration. If vibration will be encountered in the applications, shock absorbing mounting details should be employed. Free circulation of air should be provided and no object should touch the glass.

Electrical—Overload protection should be provided so that the voltage is removed if the current through the tubes exceeds 150 per cent of the rated value. When tubes are used in high voltage circuits, care must be taken to prevent spark-over between adjacent circuit elements. Tubes of the same type may be operated in parallel without the use of current dividing reactors since the inherent regulation of the high vacuum tubes will provide satisfactory equalization as long as both tubes, op-

erated in parallel, are in good condition. Marked overheating of one tube in parallel operation is a sign that the other paralleling tube is not carrying its share of the current.

Typical Rectifier Circuits—The tubes may be used in any standard rectifier circuit subject to its current and voltage limitations. Typical circuits are shown below. The approximate direct output current and voltage for each type of rectifier circuit where tubes are operated at maximum permissible plate current and inverse voltage are given in the table below. The values listed are average values of the pulsating current and voltage for an unfiltered circuit.

Circuit Designation	Number of Tubes	Load Potential Volts		Load Current Amperes		
					378A	
		371A	378A	371A	Full Filament	Half Filament
A	1	8,000	10,000	0.25	0.10	0.05
B	2	8,000	10,000	0.50	0.20	0.10
C	4	8,000	10,000	1.0	0.40	0.20
D	4	16,000	20,000	0.50	0.20	0.10
E	3	12,000	15,000	0.75	0.30	0.15
F	6	24,000	30,000	0.75	0.30	0.15
G	6	12,000	15,000	1.50	0.60	0.30

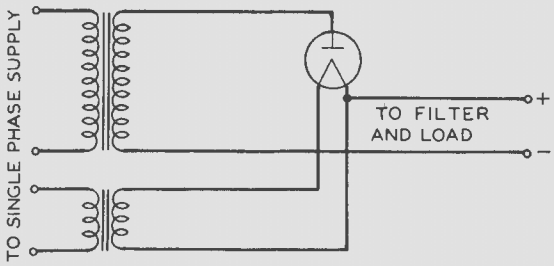

SINGLE PHASE, HALF-WAVE
CIRCUIT A

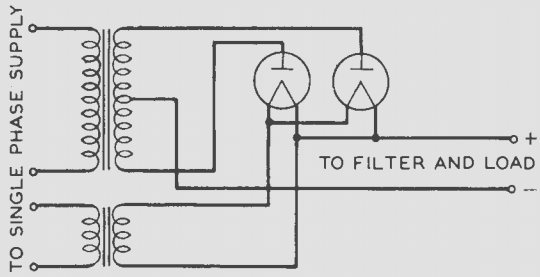

SINGLE PHASE, DOUBLE HALF-WAVE
CIRCUIT B

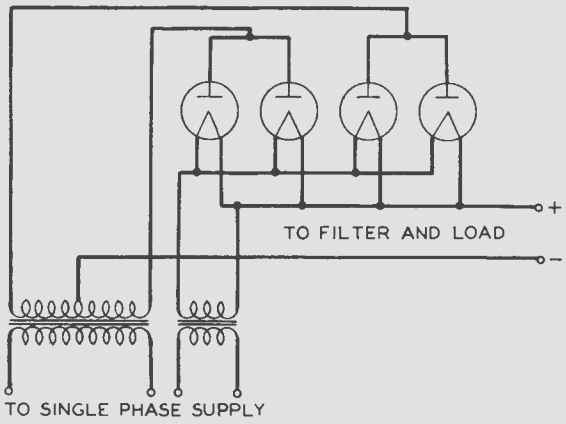

SINGLE PHASE, DOUBLE HALF-WAVE IN PARALLEL
CIRCUIT C

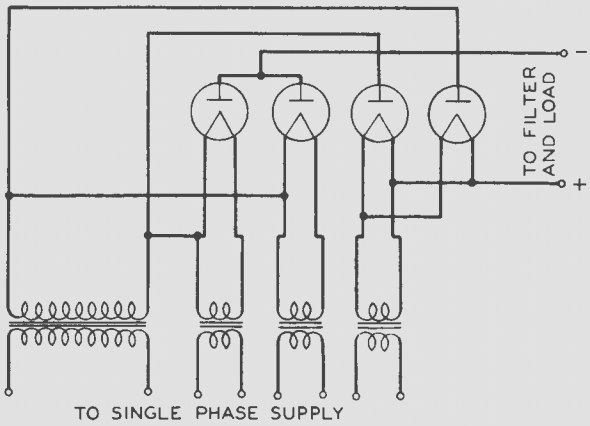

SINGLE PHASE, DOUBLE HALF-WAVE
4 TUBE SERIES CIRCUIT
CIRCUIT D

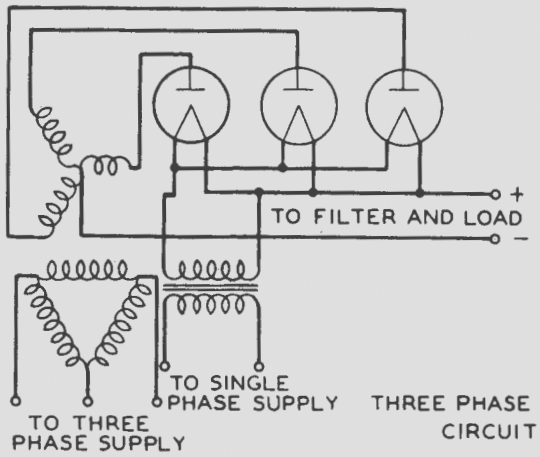

THREE PHASE "Y" CIRCUIT
CIRCUIT E

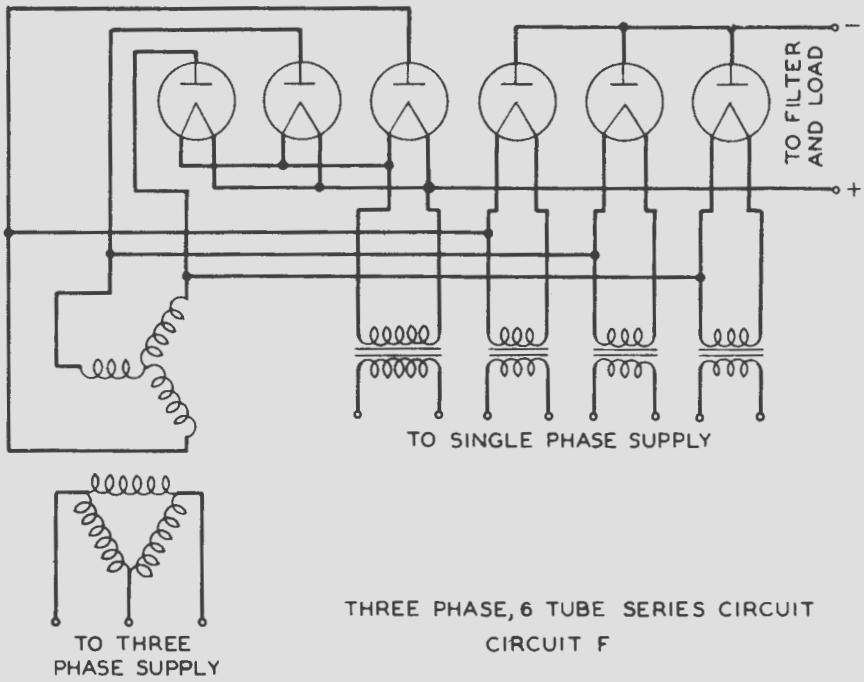

THREE PHASE, 6 TUBE SERIES CIRCUIT
CIRCUIT F

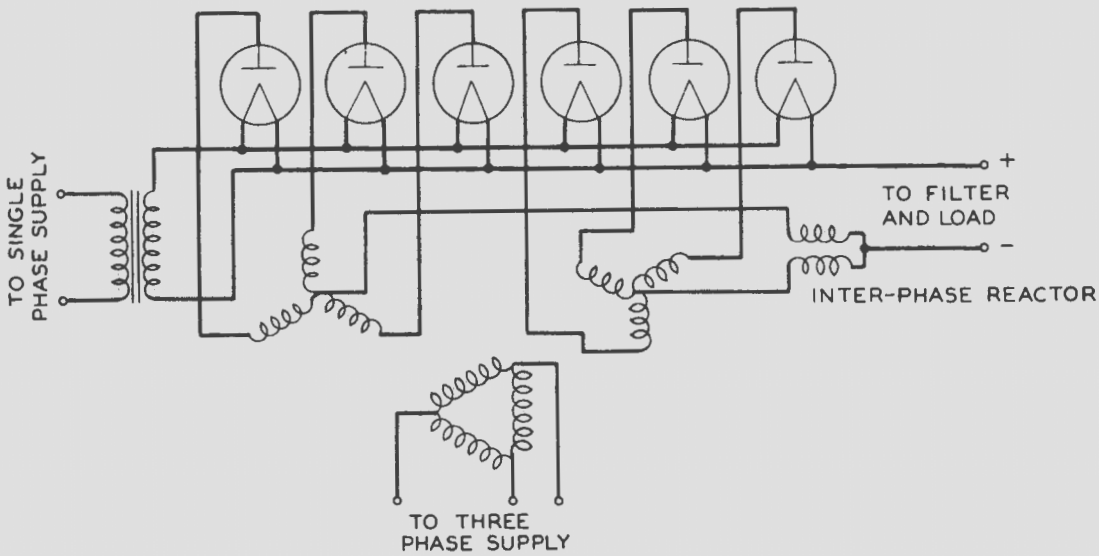

THREE PHASE, DOUBLE "Y" INTERCONNECTED
CIRCUIT G

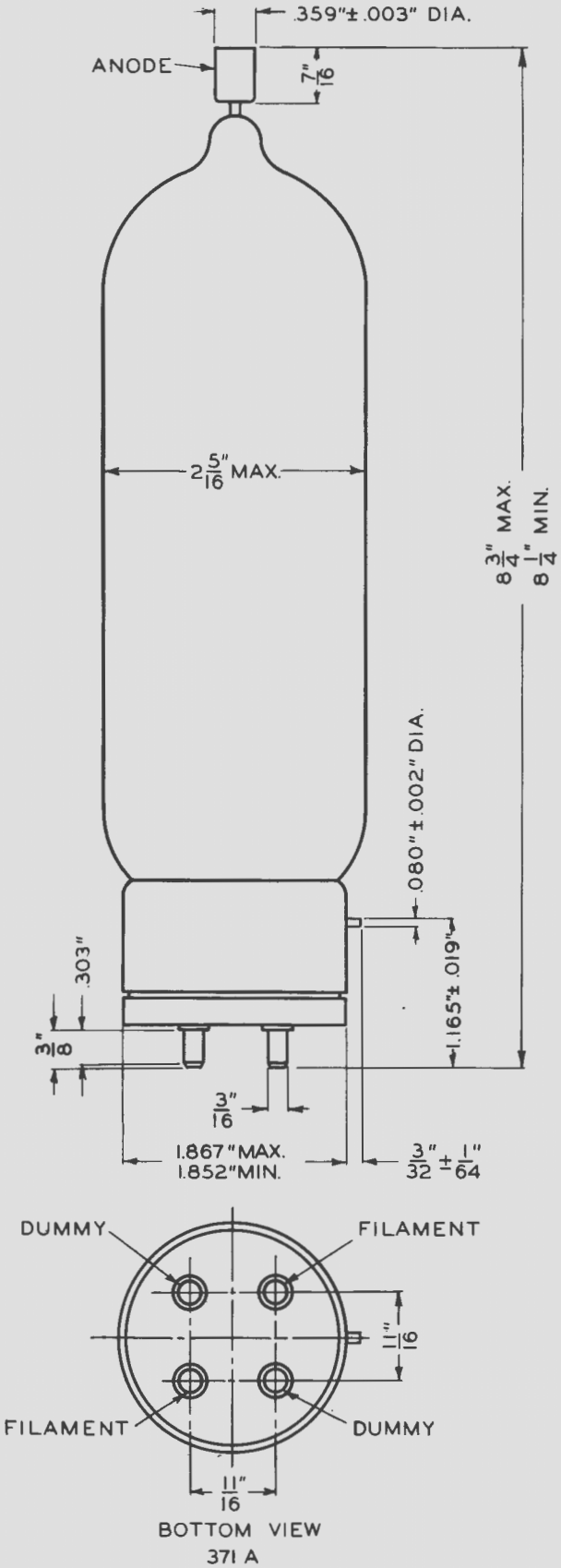

371 A

FIG. 1

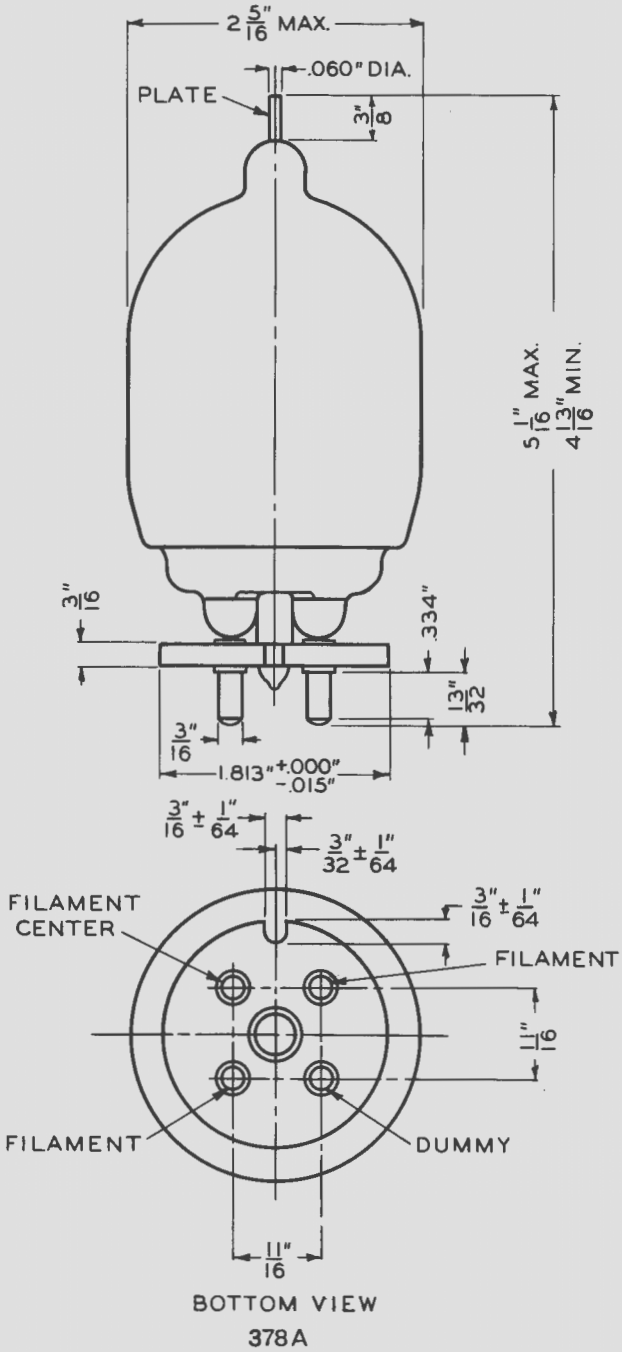

378A

FIG. 2

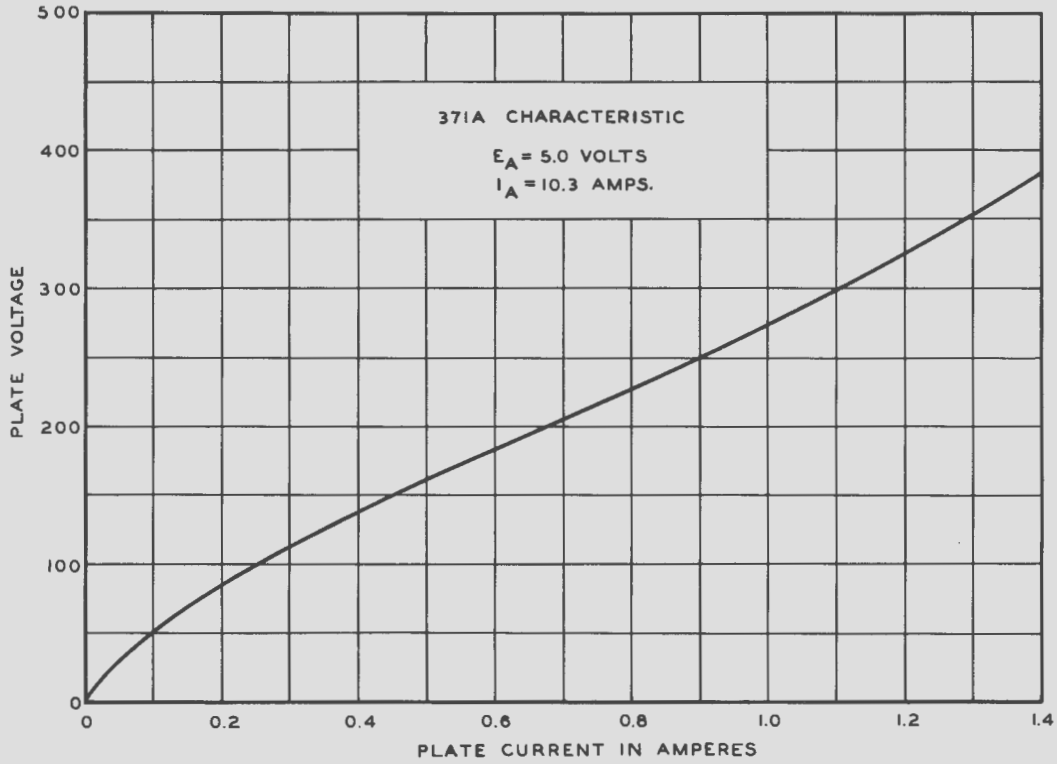

FIG. 3

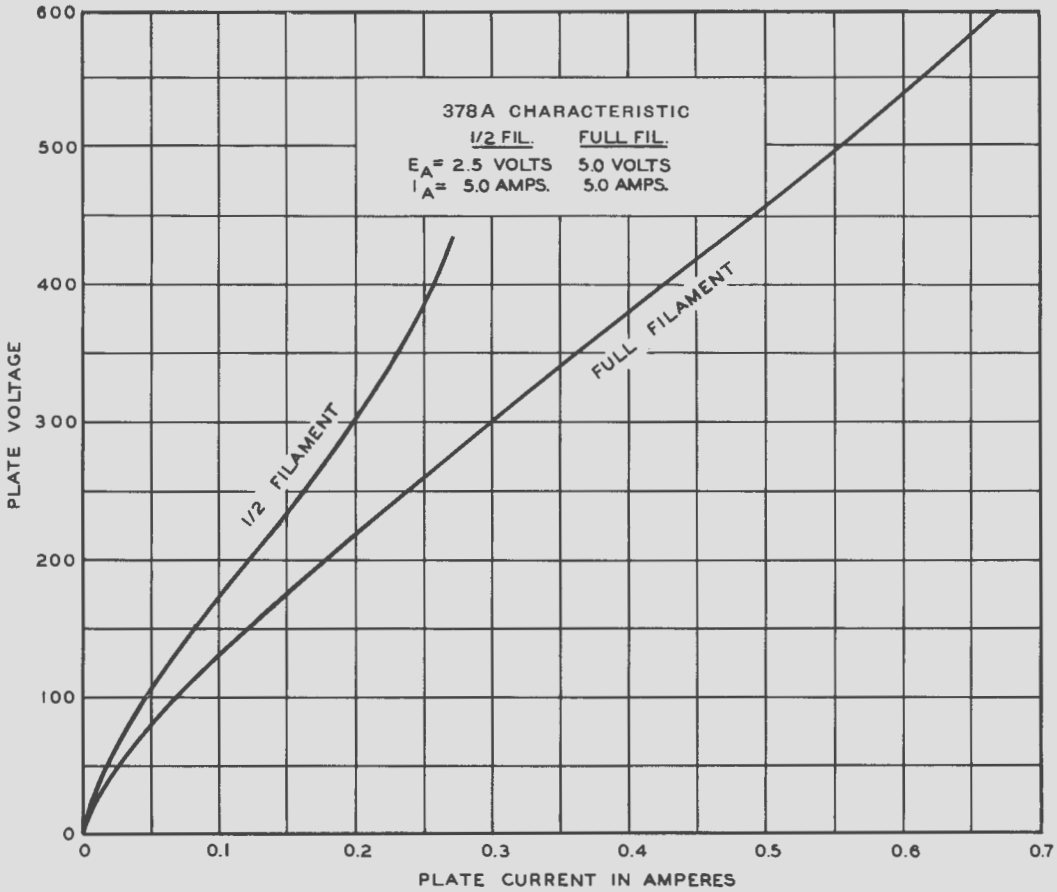

FIG. 4

1-L-41-3M
PRINTED IN U.S.A.

A development of Bell Telephone Laboratories, Incorporated, the research laboratories of the American Telephone and Telegraph Company, and the Western Electric Company