Western Electric

104D Vacuum Tube

(Dome)

Classification—Filamentary, power amplifier triode

This tube replaces the D-86327 tube and has been assigned the old code number 104D. It includes an improved filament, a new mechanical design using transverse mica supports and is mounted in a dome type bulb. The electrical characteristics are essentially the same as for the D-86327 tube.

Applications—Voice frequency and carrier frequency amplifier for telephone repeater equipment requiring greater power outputs than can be obtained from the 101D or 101F type tubes.

Volume limiter in carrier telephone equipment.

Amplifier in various testing apparatus.

Dimensions and Connections—The outline diagrams of the tube and base, giving the dimensions and the arrangement of the electrode connections to the base terminals are shown in Figures 1 and 2.

Base and Mounting—This vacuum tube employs a medium, four-pin bayonet type base having special contact metal at the ends of the pins. It is suitable for use in a Western Electric 100L, 100R or similar type socket, preferably provided with contact-metal contacts.

The tube may be mounted in either a vertical or horizontal position. If mounted in a horizontal position the plane of the filament, which is indicated in Figure 2, should be vertical. To assure adequate ventilation the tubes should be mounted with not less than 2⅝ inches between centers when two or more tubes are used.

Copyright, 1941, Western Electric Company, Incorporated

Average Direct Interelectrode Capacitances

Grid to plate	4.9 μμf.
Grid to filament	4.1 μμf.
Plate to filament	3.4 μμf.

These values are for a based tube without socket.

Filament Rating

Filament current	1.00 ampere, d.c.
Nominal filament voltage	4.5 volts

The filament of this tube is designed to operate on a current basis and should be operated as near to the rated current as practicable.

The filament resistance of this tube increases slightly during the first 2000 hours of operation. The voltage given above is the nominal value after the resistance has stabilized.

Characteristics—Typical curves showing plate current as a function of grid voltage for several values of plate voltage are shown in Figure 3. The grid and plate voltages are measured from the negative end of the filament. Corresponding amplification factor, plate resistance and transconductance characteristics are given in Figures 4, 5 and 6 respectively. Plate current as a function of plate voltage for several values of grid voltage is shown in Figure 7.

Operating Conditions and Output—Permissible operating plate and grid voltages are included within the area, ABCD in Figure 3. A number of recommended and maximum operating conditions and the corresponding values of amplification factor, plate resistance, transconductance, and performance data are given in the table.

Recommended conditions or others of no greater severity should be selected in preference to maximum conditions wherever possible. The life of the tube at maximum operating conditions will be shorter than at less severe conditions.

The performance data shown includes the fundamental power output in milliwatts and the second and third harmonic levels in db below the fundamental for values of load resistance equal to the plate resistance and for a load resistance of 5000 ohms. The peak value of sinusoidal input voltage E_{gm}, which gives the indicated output P_m, and harmonic levels F_{2m} and F_{3m}, in each case is numerically equal to the grid bias. For a smaller input voltage E_g, the approximate levels may be computed from the following relations:

$$P = P_m \left(\frac{E_g}{E_{gm}}\right)^2$$

$$F_2 = F_{2m} + 20 \log_{10} \frac{E_{gm}}{E_g}$$

$$F_3 = F_{3m} + 40 \log_{10} \frac{E_{gm}}{E_g}$$

Microphonic Noise

For a plate voltage of 130 volts, a grid bias of −20 volts, and a load resistance of 100,000 ohms, the mean microphonic output level of this tube, measured in a laboratory reference test set is 31 db below 1 volt. The range of levels of individual tubes extends from 20 to 40 db below 1 volt. Since microphonic noise output depends on the type and intensity of the mechanical disturbance which produces it, the values given here are useful chiefly for comparison with the levels of other types of tubes which have been tested in the same way.

TABLE

	Plate Voltage	Grid Bias	Plate Current	Amplification Factor	Plate Resistance	Transconductance	Load Resistance	Power Output	Second Harmonic	Third Harmonic
	Volts	Volts	Milliamperes		Ohms	Micromhos	Ohms	Milliwatts	db	db
Recommended Operating Conditions	100	−20	12.5	2.4	2700	890	2700	110	23	50
							5000	100	28	65
	100	−10	22.5	2.6	2200	1160	2200	38	34	60
							5000	32	38	65
	130	−30	14.5	2.3	2600	900	2600	250	22	47
							5000	225	25	75
	130	−20	25.0	2.5	2100	1180	2100	150	28	48
							5000	125	32	58
	130	−10	37.0	2.6	1800	1430	1800	45	38	65
							5000	36	44	70
	160	−45	13.0	2.3	2900	810	2900	475	18	37
							5000	445	21	49
	160	−35	21.5	2.4	2300	1040	2300	390	22	47
							5000	340	27	70
Maximum Operating Conditions	160	−25	33.0	2.5	1900	1300	1900	250	28	49
							5000	210	33	53
	190	−55	15.5	2.3	2800	810	2800	735	18	36
							5000	700	22	48
	190	−45	24.5	2.4	2200	1070	2200	650	22	45
							5000	565	26	65

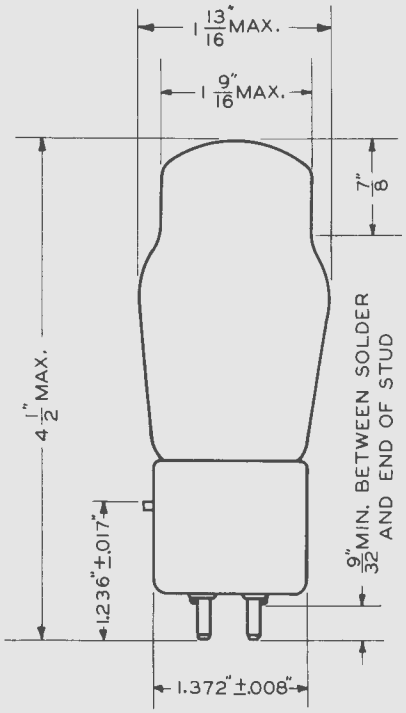

FIG. 1

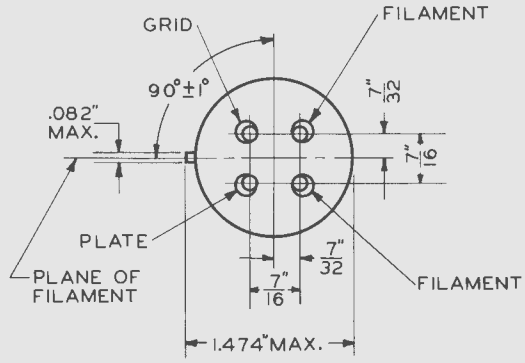

BOTTOM VIEW

FIG. 2

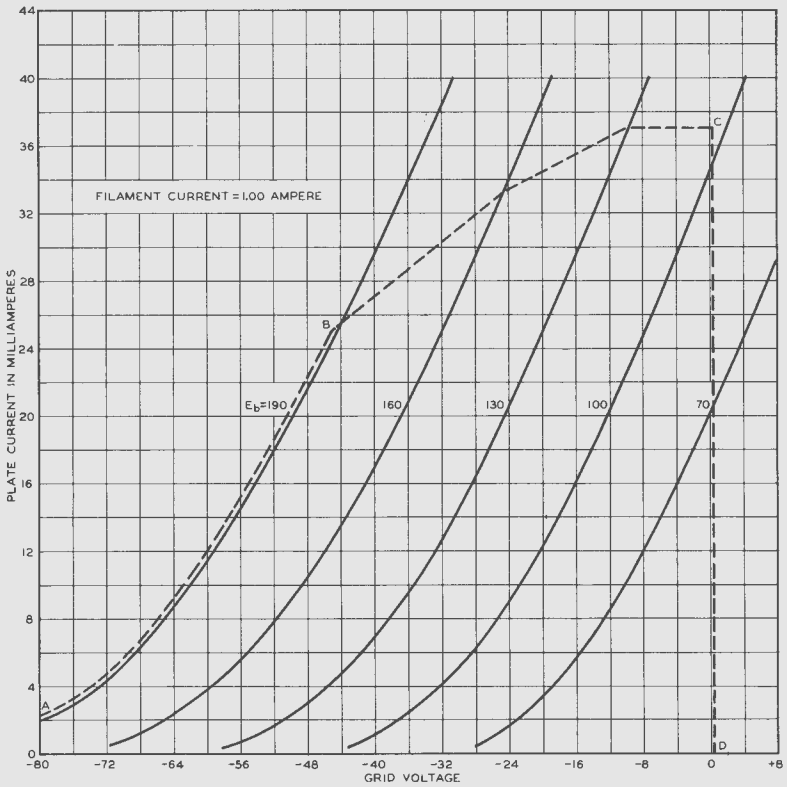

FIG. 3

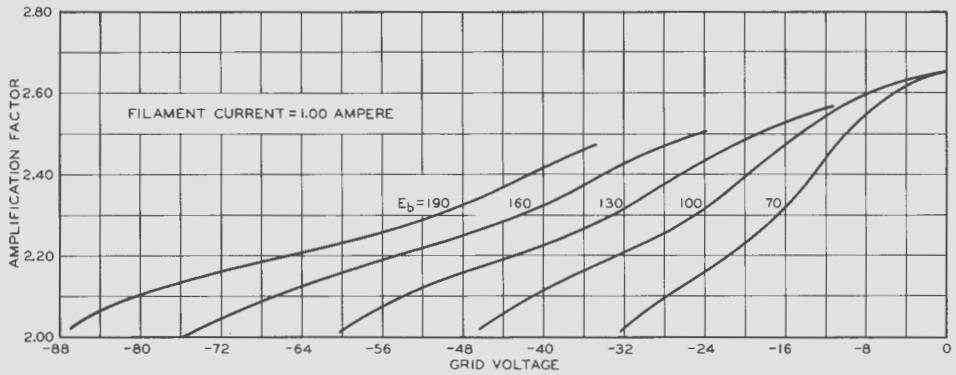

FIG. 4

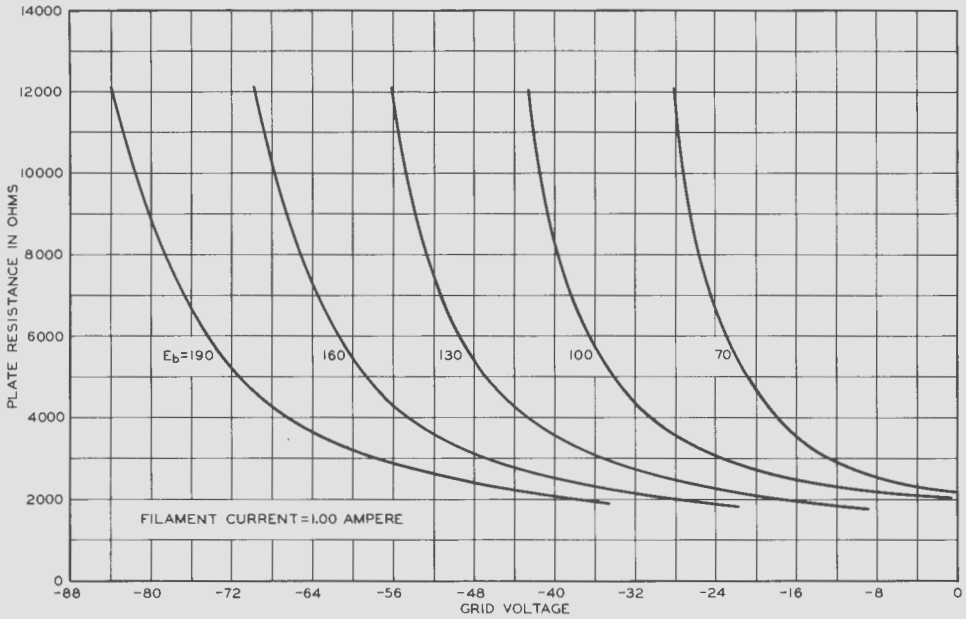

FIG. 5

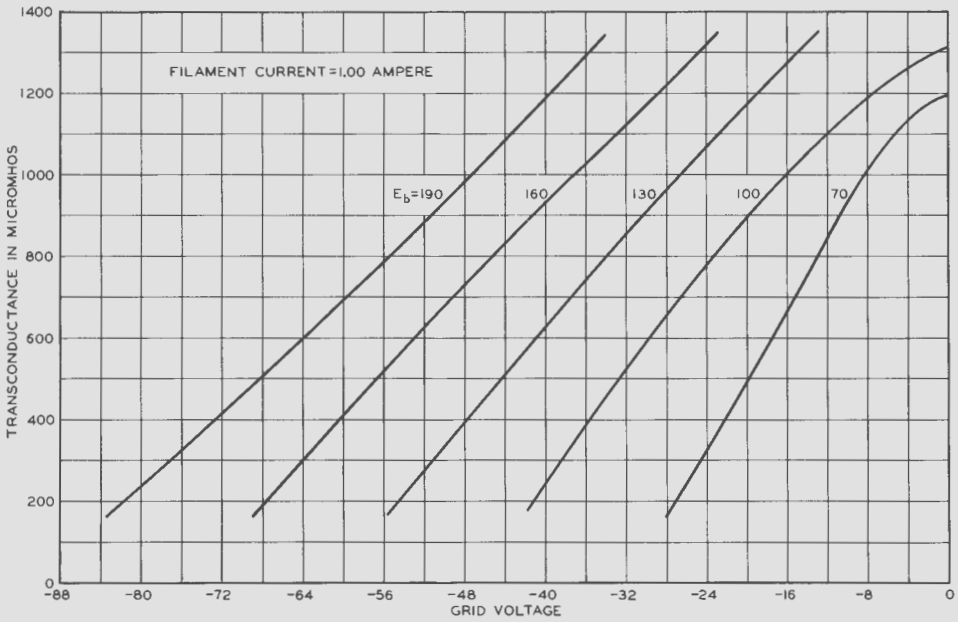

FIG. 6

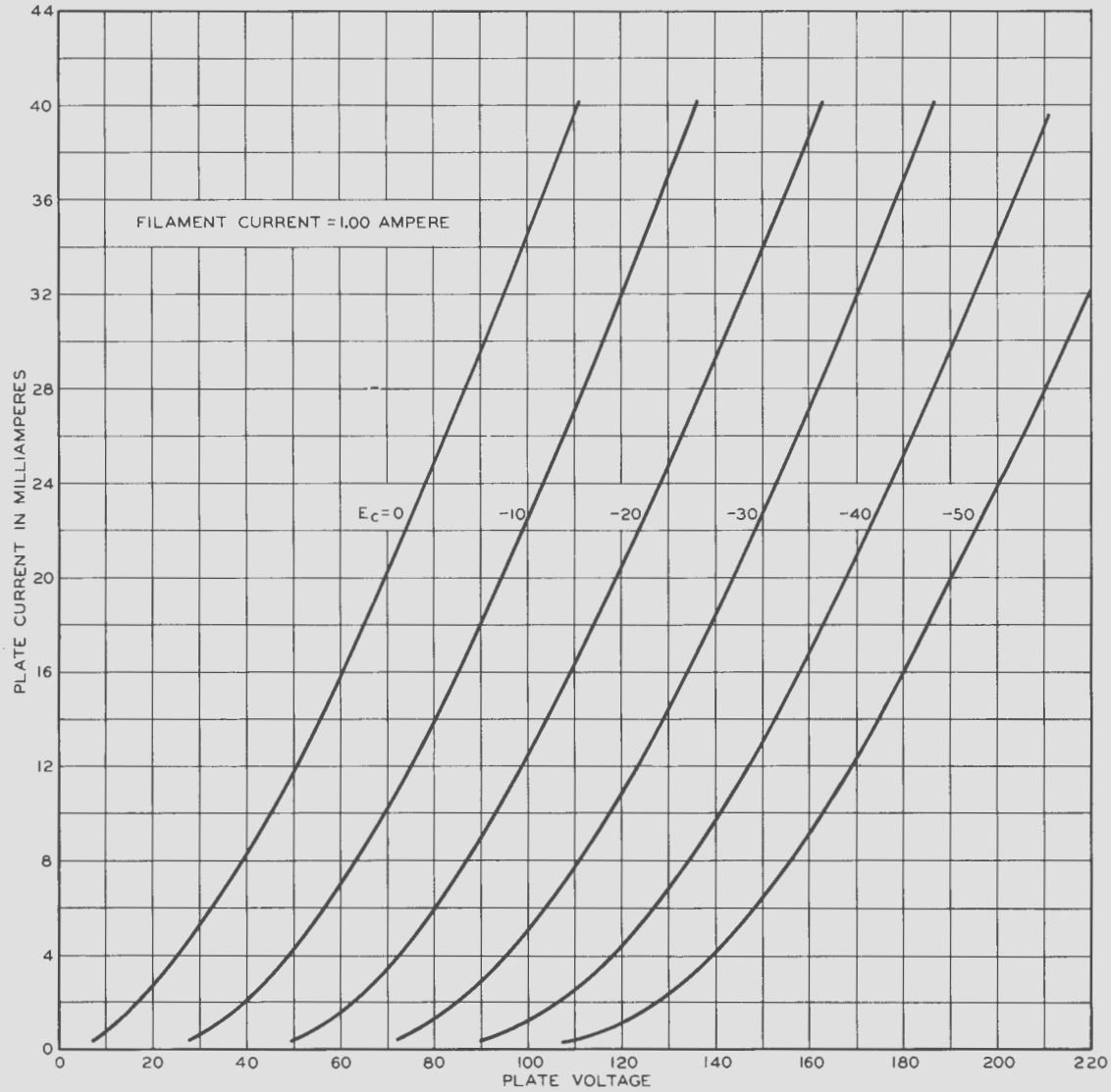
FILAMENT CURRENT = 1.00 AMPERE
$E_C = 0$
-10
-20
-30
-40
-50
PLATE CURRENT IN MILLIAMPERES
PLATE VOLTAGE
0
4
8
12
16
20
24
28
32
36
40
44
0
20
40
60
80
100
120
140
160
180
200
220

FIG. 7