Western Electric

254A Vacuum Tube

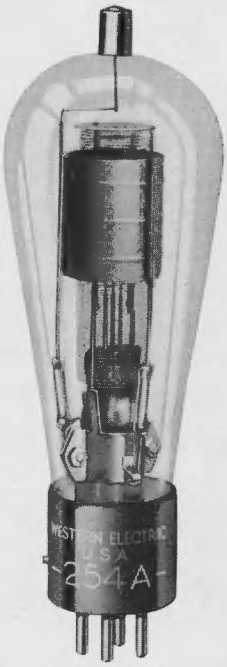

Classification—Filamentary air-cooled tetrode

May be used as a radio-frequency amplifier, oscillator or harmonic generator.

Dimensions—Dimensions and outline diagrams are shown in Figures 1 and 2. The overall dimensions are:

Maximum overall length	$6\frac{15}{16}''$
Maximum diameter	$2\frac{7}{16}''$

Mounting—Four-pin bayonet type base for use in a W.E. 143B, or similar socket. The anode terminal is located at the top of the bulb.

Filament—Thoriated tungsten

Filament voltage	5.0 volts, a.c. or d.c.
Nominal filament current	3.25 amperes
Average thermionic emission	0.60 ampere

Average Direct Interelectrode Capacitances

Plate to control grid	0.1 $\mu\mu f$
Control grid to filament and screen grid	4.6 $\mu\mu f$
Plate to filament and screen grid	9.4 $\mu\mu f$

Copyright 1936 Western Electric Company, Incorporated

Characteristics—Performance data given below are based upon a typical set of conditions. Variations can be expected with different circuits and tubes.

Figure 3 gives the static characteristics of a typical tube plotted against grid and plate voltages.

Average Characteristics at maximum direct plate voltage and dissipation ($E_b = 750$ volts, $I_b = 27$ milliamperes)

Amplification factor	80
Plate resistance	80000 ohms
Grid to plate transconductance	1000 micromhos

Operation

Maximum Ratings

Max. direct plate voltage	750 volts
Max. direct plate current	60 milliamperes
Max. plate dissipation	20 watts
Max. direct grid current	25 milliamperes
Max. r-f grid current	5 amperes
Max screen-grid dissipation	4 watts
Max. frequency for the above ratings	15 megacycles
Max. plate voltage for upper frequency limit of 20 Mc	500 volts
Max. plate voltage for frequencies between 15 and 20 Mc in proportion	

Class B Radio-Frequency Amplifier

Direct plate voltage	750	500 volts
Direct plate current for carrier conditions	40	60 milliamperes
Control-grid bias	−40	−40 volts
Direct screen-grid voltage	175	175 volts
Approx. carrier watts for use with 100% modulation	10	10 watts

Class C Radio-Frequency Oscillator or Power Amplifier—Unmodulated

Direct plate voltage	750	500 volts
Direct plate current	60	60 milliamperes
Control-grid bias	−60 to −80	−60 to −80 volts
Direct screen-grid voltage	175	175 volts
Nominal power output	30	20 watts
Plate dissipation	15	10 watts

Class C Radio-Frequency Amplifier—Plate Modulated

Direct plate voltage	500	350 volts
Direct plate current	60	60 milliamperes
Control-grid bias	−80	−75 volts
Direct screen-grid voltage	175	175 volts
Max. direct grid current	50	50 milliamperes
Nominal carrier power output for use with 100% modulation	20	14 watts

Operating Precautions

Mechanical—Figures 1 and 2 show the overall dimensions and basing arrangement for the tube.

The tubes should not be subjected to mechanical shock or excessive vibration. Mechanical vibration may cause breakage of the thoriated tungsten filaments.

A free circulation of air must be provided to insure adequate cooling of the glass during operation.

Electrical—Overload protection should always be provided for the plate circuit. A suitable fuse or circuit breaker should remove the plate voltage if the plate current exceeds 75 milliamperes. Although the tube is sufficiently rugged to withstand momentary overloads, a prolonged overload caused by inefficient adjustment of the circuit, may damage the tube. When adjusting a new circuit, reduced plate voltage or a series resistance of 1000 to 5000 ohms in the plate circuit should be used until it is operating properly.

The filament should always be operated at the rated voltage, measured at the tube terminals. A 5% decrease in filament voltage reduces the thermionic emission approximately 25%. Either direct or alternating current may be used for heating the filament. If direct current is used, the plate and grid circuit returns should be connected to the negative filament terminal. If alternating current is used, the circuit returns should be connected to the center tap of the filament heating transformer winding or to the center tap of a resistor placed between the filament terminals. A resistance of 20 to 30 ohms of three watt rating is suitable.

In cases where severe and prolonged overload has temporarily impaired the electronic emission of the filament, the activity may be restored by operating the filament, with the plate and grid voltages off, 30% above normal voltage for 10 minutes followed by a longer period at normal voltage.

The voltage for the screen grid may be obtained from a separate source or from a potentiometer or series resistor in the plate supply. The screen-grid voltage should not be applied without the plate voltage.

Radio-Frequency Oscillator or Power Amplifier

Class B—Radio-Frequency Amplifier

The Class B radio-frequency amplifier is used to amplify a modulated radio-frequency carrier wave without appreciable distortion. It operates similarly to the Class B audio amplifier except that a single tube may be used, the tuned output circuit serving to preserve the wave shape. The push-pull circuit, however, eliminates the even order harmonics and thus increases the efficiency slightly.

Class C—Radio-Frequency Oscillator or Power Amplifier—Grid bias below cut-off.

Unmodulated

This type of operation is suitable for telegraphy, or the production of a continuous flow of radio-frequency power for purposes other than communication.

Plate Modulated

This type of operation is for use when the modulating voltage is superimposed on the plate supply voltage and to obtain good quality the output power should vary as the square of the plate voltage. For complete or 100% modulation, the plate voltage varies from zero to twice the applied direct value during a cycle of the audio frequency. With no modulation applied, the plate voltage is, of course, the direct value and the carrier power output is one-fourth of the peak power output under 100% modulation. In this case, since the plate voltage varies with modulation, the direct value must be rated lower than for other types of operation.

High Frequency Ratings

The frequency limits specified under maximum ratings are based on the tube being used as an oscillator. The tube may be used at full rating up to 15 megacycles. When operating at higher frequencies, the dielectric losses, charging currents and lead-in heating are increased greatly. The plate voltage and hence plate dissipation must be reduced to values specified for the upper frequency limit and for frequencies between these two limits the plate voltage should be proportionately reduced.

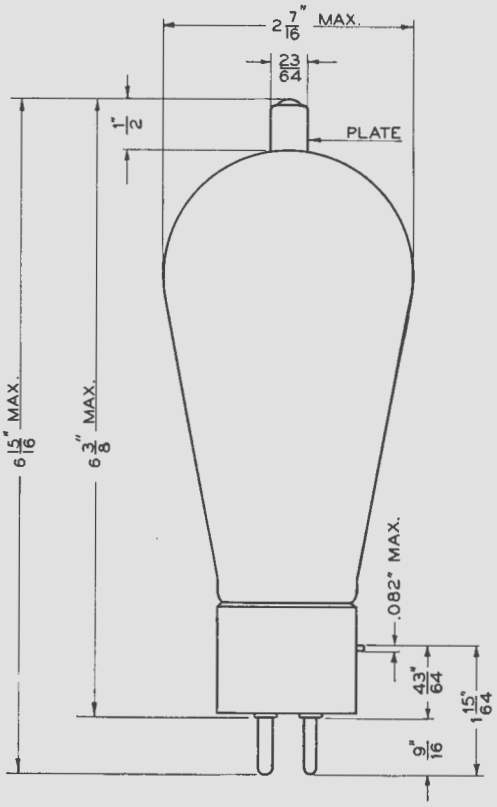

FIG. 1

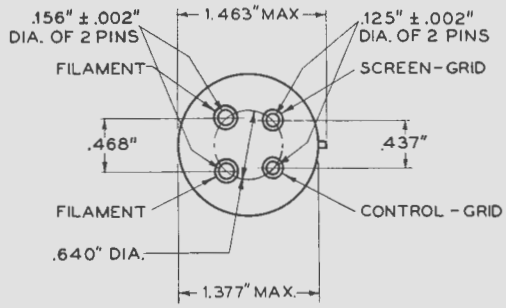

FIG. 2

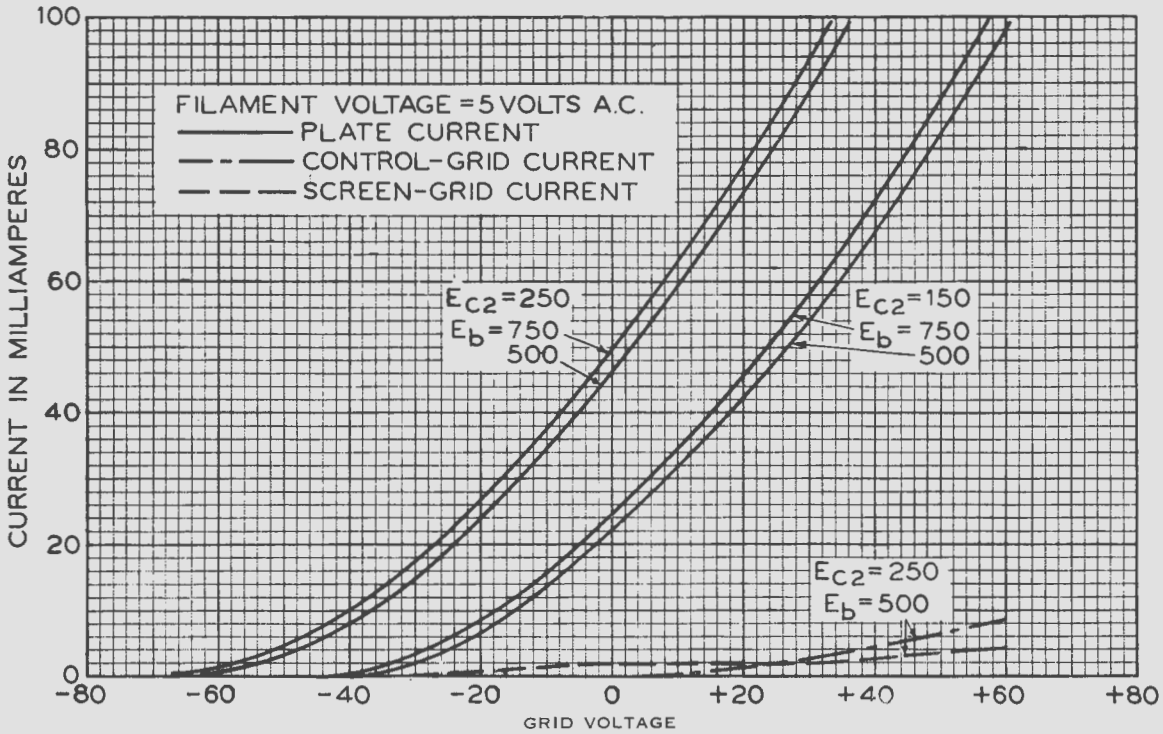

FIG. 3

1-C-36-28C
PRINTED IN U.S.A.

A development of Bell Telephone Laboratories, Incorporated, the research laboratories of the American Telephone and Telegraph Company, and the Western Electric Company

V. T. DATA SHEET 254A
ISSUE 1