Western Electric

368A, 368AS and 388A Vacuum Tubes

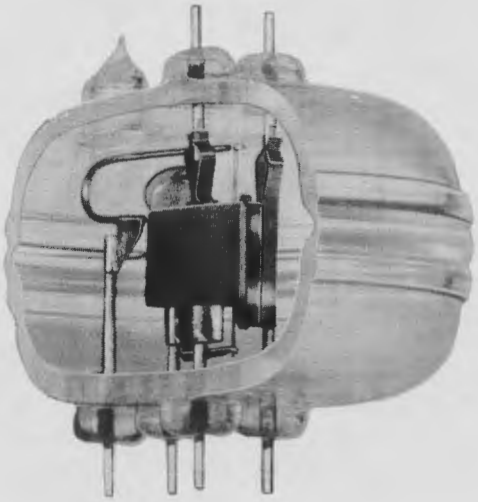

388A

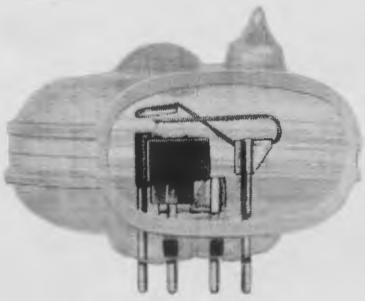

368AS

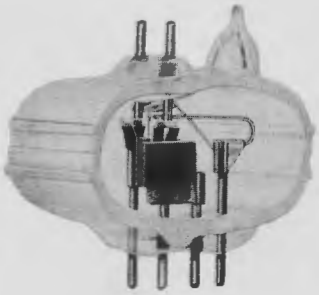

368A

Classification—Filamentary Air-Cooled Triodes

These tubes are designed for operation as oscillators or amplifiers in the ultra-high frequency range up to 1700 megacycles. They are characterized by extremely short tungsten leads, fin-type grids, graphite anodes and hard glass envelopes. These features contribute to their usefulness at the high upper frequency limits.

Mountings—No bases are provided. The tubes may be supported directly by the tungsten leads provided sufficient flexibility is incorporated into the design of the connections. It is recommended that small brass or copper sleeves, preferably silver plated when working near the upper frequency limits, be used for connectors. Soldering directly to the leads should not be attempted.

Mounting Positions—These tubes may be mounted in any position but should be protected from vibration to prevent filament breakage.

Operating Precautions

Mechanical—The thoriated tungsten filaments in these tubes are somewhat more fragile than those of other transmitting tubes of similar power ratings. The tubes should, therefore, be handled with great care to prevent filament breakage. Since no bases are provided, all strain, due to connections to the tubes, are absorbed in the glass and hence should be kept to a minimum. Due to the shortness of the leads, the terminals will run quite hot and the connector design should allow for heat conductivity away from the terminals. Silver plating of all r.f. leads and sliding connections will aid in attaining maximum output at the extreme upper frequency ranges of the tubes.

Electrical—Overload protection should always be provided for the plate circuits. A suitable fuse or circuit breaker should remove the plate voltage if the plate current exceeds 125 milliamperes per tube in the case of the 368A and 368AS and 200 milliamperes per tube in the case of the 388A. When adjusting a new circuit, or installing a new tube, a resistance of 1000 to 2000 ohms should be used in the plate supply circuit until it is operating properly.

These filaments should be operated at the lowest voltage that will give satisfactory operation. Ordinarily there is an optimum filament voltage associated with the highest output when the tubes are used as oscillators at ultra-high frequencies. This optimum filament voltage will increase very slowly with life. Either direct or alternating current may be used for heating the filaments. If direct current is used, the plate and grid circuit returns should be connected to the negative filament terminals. If alternating current is used, the circuit returns should be connected to the center tap of the filament heating transformer winding or the center tap of a resistor placed between the filament terminals. A resistance of about 10 ohms of 1 watt rating is suitable.

Ultra High Frequency Operation

When these tubes are used at frequencies above 300 megacycles, certain precautions must be observed in the circuit design in order to utilize the features of these tubes to the maximum degree. In order to assure that the filaments are at ground potential, tuning of both filament leads is necessary. Adjustable concentric lines of approximately ¼ wavelength are best suited for this purpose as well as for the tank circuit tuning. It is desirable to avoid the use of dielectric materials to as great an extent as possible and to confine that which is necessary for mounting circuit elements or for by-passing condensers to points of low r.f. voltage. Special attention should be paid to shielding these tubes since relative large amounts of power may be radiated by the tube elements themselves.

Figure No. 1 shows a typical circuit for ultra-high frequency operation as an oscillator. This circuit applies directly to the 368A and 388A tubes which are double ended. For the 368AS tube, the right hand grid and plate tuners are omitted.

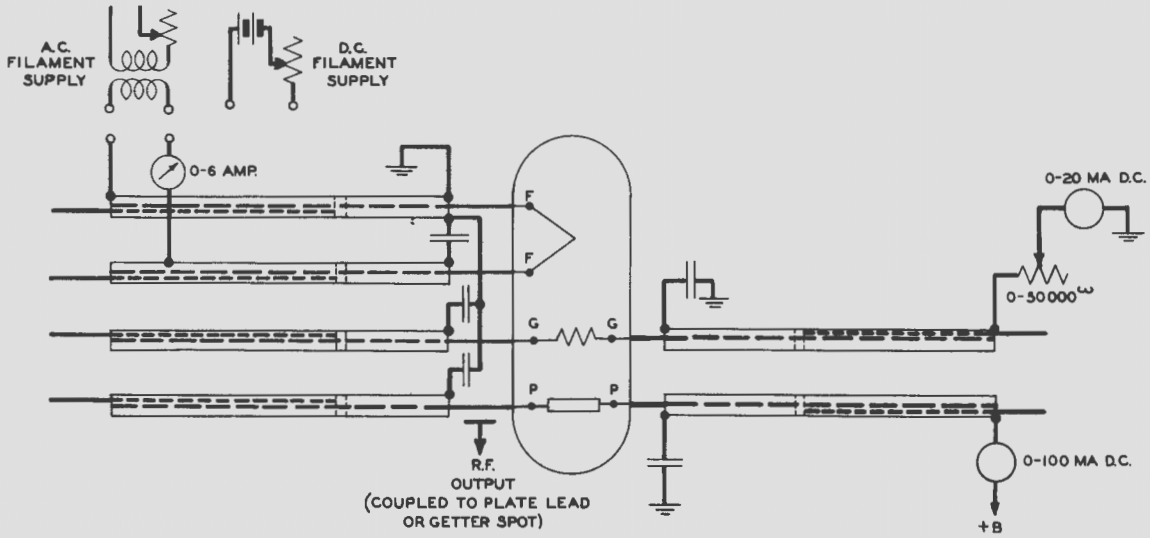

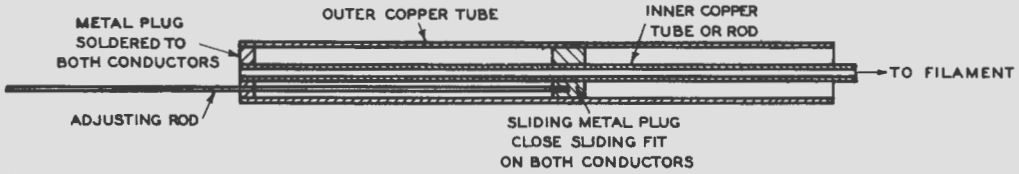

NOTE:
RATIO OF CONDUCTOR DIAMETERS BETWEEN
2 AND 4. LENGTH, 3/8 WAVELENGTH.

DETAIL OF FILAMENT TUNING RODS

FIG. 1

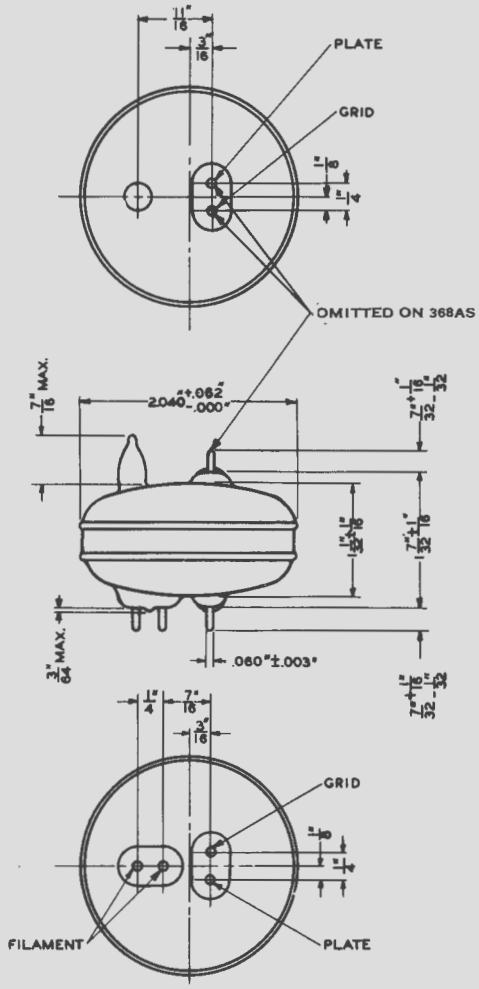

368A
368AS

368A and 368AS

Ratings

Filament—Thoriated tungsten.

Nominal filament voltage.....	1.2 volts, a-c or d-c
*Filament current.....	4.0 to 4.5 amperes.
Average thermionic emission...	0.3 ampere

*These filaments are current operated. To insure maximum life, the current should be adjusted to the lowest value which will give satisfactory performance.

Characteristics—The following characteristics are based on a typical tube. Variations can be expected with different tubes and with different circuits.

Average Characteristics at maximum plate voltage and dissipation (Eb=350 volts, Ib=57 milliamperes).

Amplification factor.....	8
Plate resistance.....	3200 ohms
Grid to plate transconductance.....	2500 micromhos

Average Direct Interelectrode Capacitances

	368A	368AS
Plate to grid.....	1.2	1.1 $\mu\mu$f.
Grid to filament.....	1.0	0.9 $\mu\mu$f.
Filament to plate.....	0.7	0.6 $\mu\mu$f.

Operation

Maximum Ratings

Max. direct plate voltage...	350 volts
Max. direct plate current...	75 milliamperes
Max. direct grid current....	12 milliamperes
Max. plate dissipation.....	20 watts

Radio- Frequency Oscillator or Amplifier—Unmodulated

Max. direct plate voltage.....	350 volts
Max. direct plate current.....	75 milliamperes
Max. direct grid current.....	12 milliamperes

Nominal Power Output—Unmodulated Frequency—Mc.	Power Output—Watts 368A	368AS
1000.....	3.0	2.5
1250.....	2.5	2.0
1400.....	2.2	Limit of oscillation
1750.....	Limit of oscillation	.....

Radio- Frequency Oscillator or Amplifier—Plate Modulated

Max. direct plate voltage.....	300 volts
Max. direct plate current.....	75 milliamperes
Max. direct grid current.....	12 milliamperes

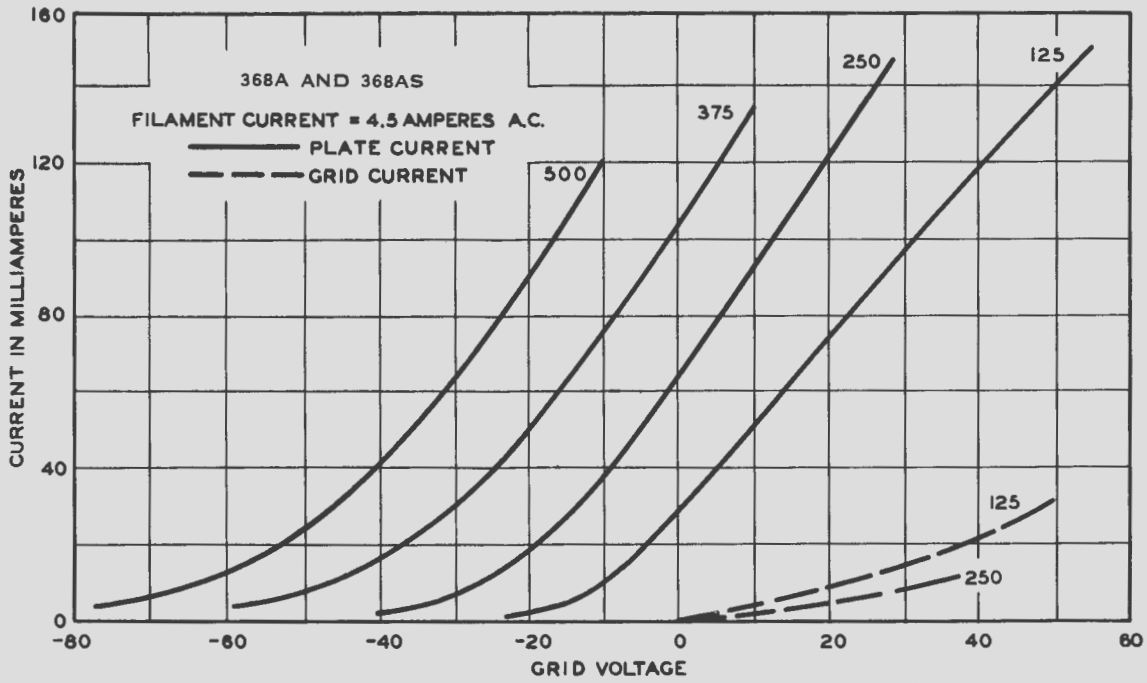
368A AND 368AS
FILAMENT CURRENT = 4.5 AMPERES A.C.
PLATE CURRENT
GRID CURRENT
500
375
250
125
125
250
CURRENT IN MILLIAMPERES
GRID VOLTAGE
160
120
80
40
0
-80
-60
-40
-20
0
20
40
60

FIG. 2

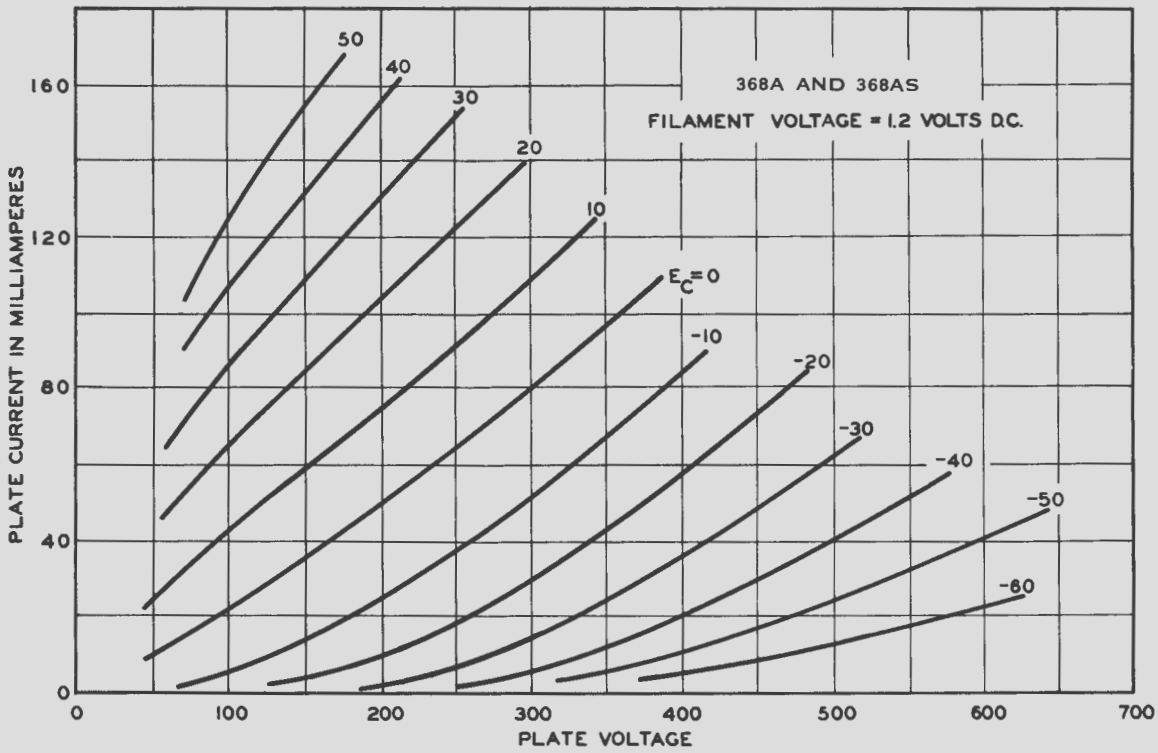
368A AND 368AS
FILAMENT VOLTAGE = 1.2 VOLTS D.C.
50
40
30
20
10
$E_C = 0$
-10
-20
-30
-40
-50
-60
PLATE CURRENT IN MILLIAMPERES
PLATE VOLTAGE
160
120
80
40
0
0
100
200
300
400
500
600
700

FIG. 3

388A

Ratings

Filament—thoriated tungsten.

Nominal filament voltage	1.5 volts, a-c or d-c
*Filament current	9.0 to 9.25 amperes
Average thermionic emission	0.8 amperes

*This filament is current operated. To insure maximum life, the current should be adjusted to the lowest value which will give satisfactory performance.

Characteristics—The following characteristics are based on a typical tube. Variations can be expected with different tubes and with different circuits.

Average Characteristics at maximum plate voltage and dissipation (Eb = 500 volts, Ib = 100 milliamperes).

Amplification factor	6
Plate resistance	3000 ohms
Grid to plate transconductance	2000 micromhos

Average Direct Interelectrode Capacitances

Plate to grid	1.5 $\mu\mu$f.
Grid to filament	1.5 $\mu\mu$f.
Filament to plate	1.0 $\mu\mu$f.

Operation

Maximum Ratings

Max. direct plate voltage	500 volts
Max. direct plate current	125 milliamperes
Max. direct grid current	20 milliamperes
Max. plate dissipation	50 watts

Radio- Frequency Oscillator or Amplifier—Unmodulated

Max. direct plate voltage	500 volts
Max. direct plate current	125 milliamperes
Max. direct grid current	20 milliamperes

Nominal Power Output—Unmodulated

Frequency—Mc.	Power Output—Watts
400	12
500	10
600	8
700	6
800	3
900	Limit of oscillation

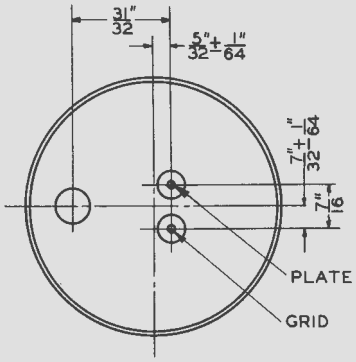

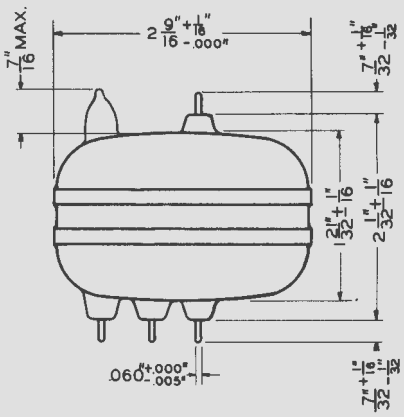

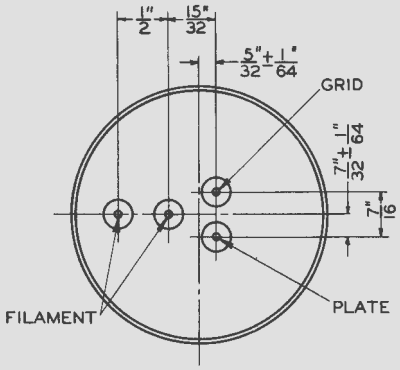

388A

Radio- Frequency Oscillator or Amplifier—Plate Modulated

Max. direct plate voltage	450 volts
Max. direct plate current	100 milliamperes
Max. direct grid current	20 milliamperes
Nominal power output at 700 mc.	4 watts

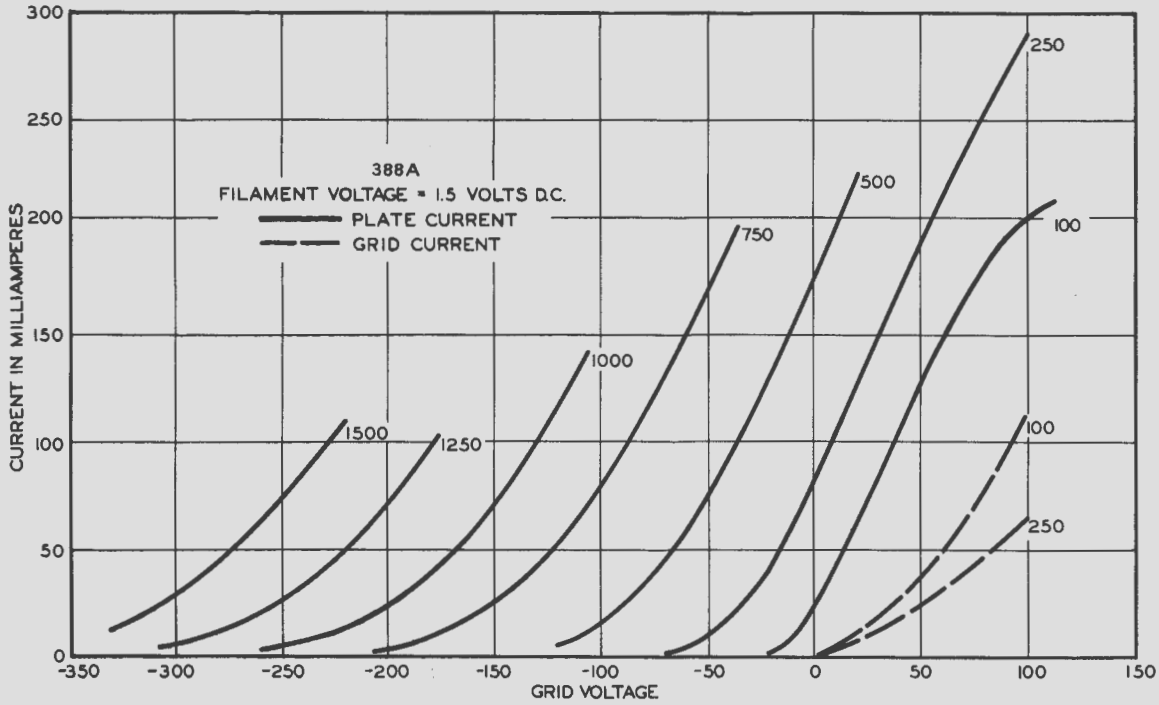
388A
FILAMENT VOLTAGE = 1.5 VOLTS D.C.
PLATE CURRENT
GRID CURRENT
CURRENT IN MILLIAMPERES
GRID VOLTAGE
300
250
200
150
100
50
0
-350
-300
-250
-200
-150
-100
-50
0
50
100
150
1500
1250
1000
750
500
250
100
100
250

FIG. 4

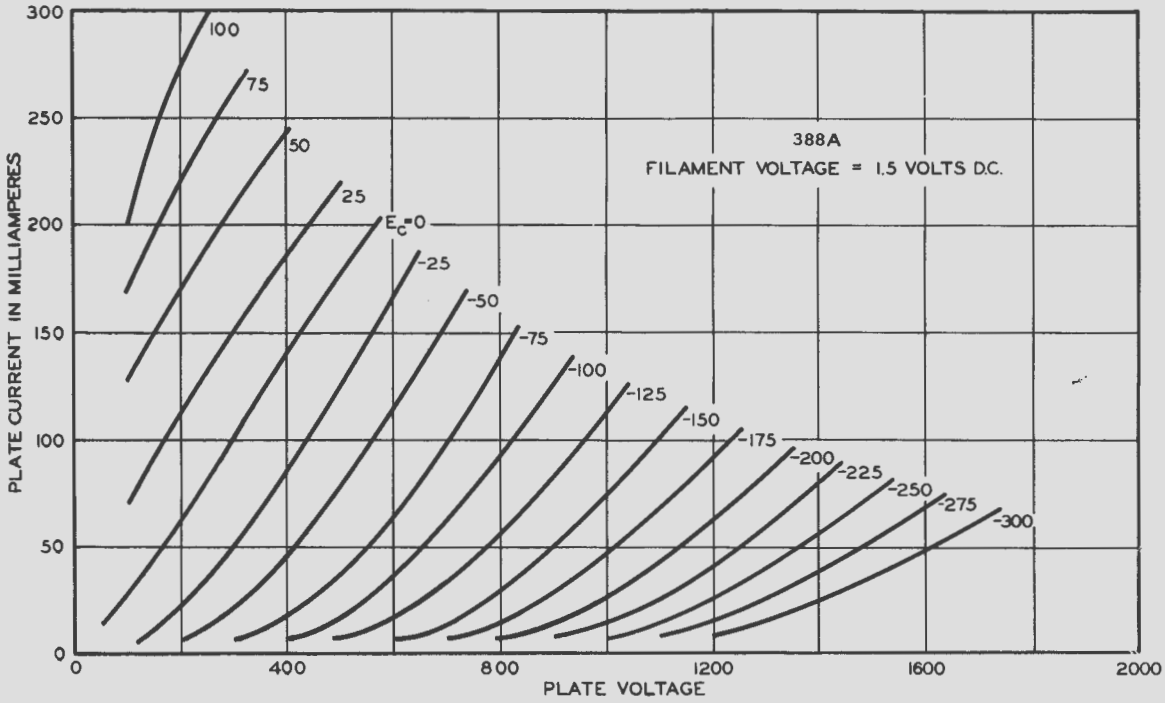
388A
FILAMENT VOLTAGE = 1.5 VOLTS D.C.
PLATE CURRENT IN MILLIAMPERES
PLATE VOLTAGE
300
250
200
150
100
50
0
400
800
1200
1600
2000
100
75
50
25
E_c=0
-25
-50
-75
-100
-125
-150
-175
-200
-225
-250
-275
-300

FIG. 5