Western Electric

284D Vacuum Tube

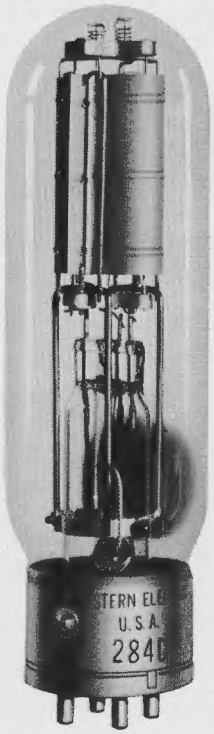

Classification—Filamentary air-cooled triode

The tube is designed primarily for use as an audio-frequency amplifier or modulator and may be used as a replacement for the 284A.

Dimensions—Dimensions and outline diagrams are shown in Figures 1 and 2. The overall dimensions are:

Maximum overall length	$7\frac{15}{16}''$
Maximum diameter	$2\frac{5}{16}''$

Mounting—Large four-pin bayonet type base for use in a W.E. 112A or similar socket for either vertical or horizontal mounting. If mounted horizontally, the plane of the filament, which is indicated in Figure 2, should be vertical.

Filament—Thoriated tungsten

Filament voltage	10 volts, ac or dc
Nominal filament current	3.25 amperes
Average thermionic emission	1.5 amperes

Copyright 1937 Western Electric Company, Incorporated

Average Direct Interelectrode Capacitances

Plate to grid	8.3 μμf
Grid to filament	6.0 μμf
Plate to filament	5.6 μμf

Characteristics—Performance data given below are based upon a typical set of conditions. Variations can be expected with different circuits and tubes.

Figure 3 gives the static characteristics of a typical tube plotted against grid and plate voltages.

Average Characteristics at maximum direct plate voltage and dissipation—Class A (E_b= 1250 volts, I_b=64 milliamperes).

Amplification factor	4.8
Plate resistance	1900 ohms
Grid to plate transconductance	2500 micromhos

Operation

Maximum Ratings

Max. direct plate voltage	1250 volts
Max. direct plate current	150 milliamperes
Max. plate dissipation	85 watts
Max. direct grid current	100 milliamperes
Max. r-f grid current	5 amperes
Max. frequency for the above ratings	6 megacycles

Class A Audio Amplifier or Modulator

Direct plate voltage	1250	1000	750 volts
Grid bias	−220	−161	−104 volts
Direct plate current	64	80	100 milliamperes
Load impedance	10000	8500	8000 ohms
Undistorted output	40	22.5	10 watts
Second harmonic distortion— percentage of fundamental	5.0	2.4	1.1 per cent
Plate dissipation	80	80	75 watts

Class B Audio Amplifier or Modulator—for Balanced 2 Tube Circuit

Direct plate voltage	1250	1000 volts
Grid bias	−250	−195 volts
Direct plate current per tube		
No drive	15	15 milliamperes
Max. drive	100	100 milliamperes
Plate dissipation	55	45 watts
Load resistance plate-to-plate	11200	8800 ohms
Load resistance per tube	2800	2200 ohms
Approximate maximum output—2 tubes	140	110 watts
Recommended power for driving stage	10	10 watts

Class B Radio-Frequency Amplifier (Other types of tubes are more suitable for r-f service)

Direct plate voltage	1250	1000 volts
Direct plate current for carrier conditions	100	100 milliamperes
Grid bias	−280	−225 volts
Approximate carrier watts for use with 100% modulation	42	42 watts

Class C Radio-Frequency Oscillator or Power Amplifier—Unmodulated

Direct plate voltage	1250	1000 volts
Direct plate current	150	150 milliamperes
Grid bias	−420 to −560	−340 to −450 volts
Nominal power output	125	100 watts
Plate dissipation	62.5	50 watts

Class C Radio-Frequency Amplifier—Plate Modulated

Direct plate voltage	1000	750 volts
Direct plate current	150	150 milliamperes
Grid bias	−450	−340 volts
Max. direct grid current	50	50 milliamperes
Nominal carrier power output for use with 100% modulation	100	75 watts

Operating Precautions

Mechanical—Figures 1 and 2 show the overall dimensions and basing arrangement for the tube.

The tubes should not be subjected to mechanical shock or excessive vibration. Mechanical vibration may cause breakage of the thoriated tungsten filaments.

A free circulation of air must be provided to insure adequate cooling of the glass during operation.

Electrical—Overload protection should always be provided for the plate circuit. A suitable fuse or circuit breaker should remove the plate voltage if the plate current exceeds 175 milliamperes. Although the tube is sufficiently rugged to withstand momentary overloads, a prolonged overload caused by inefficient adjustment of the circuit, may damage the tube. When adjusting a new circuit, reduced plate voltage or a series resistance of 1,000 to 5,000 ohms in the plate circuit should be used until it is operating properly.

The filament should always be operated at the rated voltage, measured at the tube terminals. A 5% decrease in filament voltage reduces the thermionic emission approximately 25%. Either direct or alternating current may be used for heating the filament. If direct current is used, the plate and grid circuit returns should be connected to the negative filament terminal. If alternating current is used, the circuit returns should be connected to the center tap of the filament heating transformer winding or to the center tap of a resistor placed between the filament terminals. A resistance of 20 to 30 ohms of three watt rating is suitable.

In cases where severe and prolonged overload has temporarily impaired the electronic emission of the filament, the activity may be restored by operating the filament, with the plate and grid voltages off, 30% above normal voltage for 10 minutes followed by a longer period at normal voltage.

Audio Amplifier or Modulator

Class A—Peak grid drive equal to or less than the grid bias.

Grid bias may be obtained from the drop across a resistance in the plate current return or from a battery or rectifier supply.

Plate dissipation allowable for this type of service is generally lower than is safe for other uses since the energy is dissipated in the plate in smaller areas due to relatively high voltage drop in the tube.

The plate dissipation is equal to the plate voltage multiplied by the normal plate current. Performance data are based upon the use of a resistance load. It is possible to obtain very substantial reduction in 2nd harmonic output by the use of the push-pull circuit. With resistance loads greater than twice the plate resistance of the tube, improved levels of harmonic outputs are obtained with relatively little sacrifice in the level of the fundamental power outputs.

Class B—Grid bias practically at cut-off and grid driving voltage higher than the bias.

Two tubes may be used in a balanced circuit. An adequate driving stage and an input transformer with good regulation must be used so that the grid current drawn during positive grid swings does not produce appreciable distortion. The output transformer must transform the load impedance to the proper value for the tubes used. The power output obtainable will be determined by the quality of the transformer used and the amount of distortion which can be tolerated. The grid bias must be held constant and therefore cannot be obtained by grid leak or series resistor methods. A battery or other source having good regulation is necessary.

The power required of a modulator for complete modulation of a Class C amplifier is one-half the direct power input to the plates of the Class C amplifier.

Radio-Frequency Oscillator or Power Amplifier

Class B—Radio-frequency amplifier.

The Class B radio-frequency amplifier is used to amplify a modulated radio-frequency carrier wave without appreciable distortion. It operates similarly to the Class B audio amplifier except that a single tube may be used, the tuned output circuit serving to preserve the wave shape. The push-pull circuit, however, eliminates the even order harmonics and thus increases the efficiency slightly.

Class C—Radio-frequency oscillator or power amplifier—Grid bias below cut-off.

Unmodulated

This type of operation is suitable for telegraphy, or the production of a continuous flow of radio-frequency power for purposes other than communication.

Plate Modulated

This type of operation is for use when the modulating voltage is superimposed on the plate supply voltage and to obtain good quality the output power should vary as the square of the plate voltage. For complete or 100% modulation, the plate voltage varies from zero to twice the applied direct value during a cycle of the audio frequency. With no modulation applied, the plate voltage is, of course, the direct value and the carrier power output is one-fourth of the peak power output under 100% modulation. In this case, since the plate voltage varies with modulation, the direct value must be rated lower than for other types of operation.

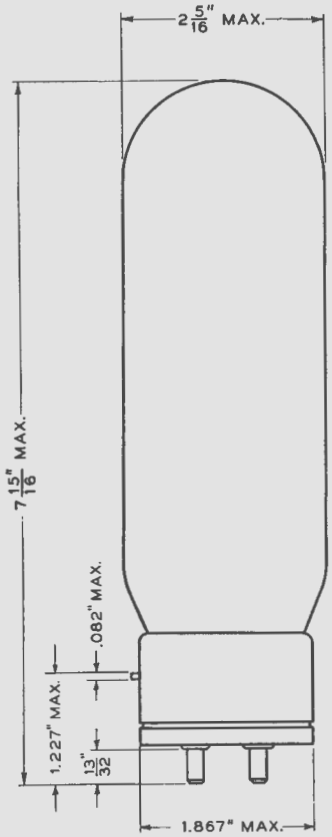

FIG. 1

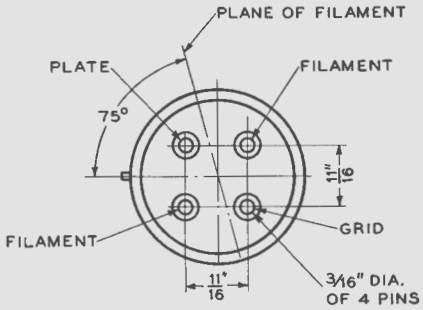

FIG. 2

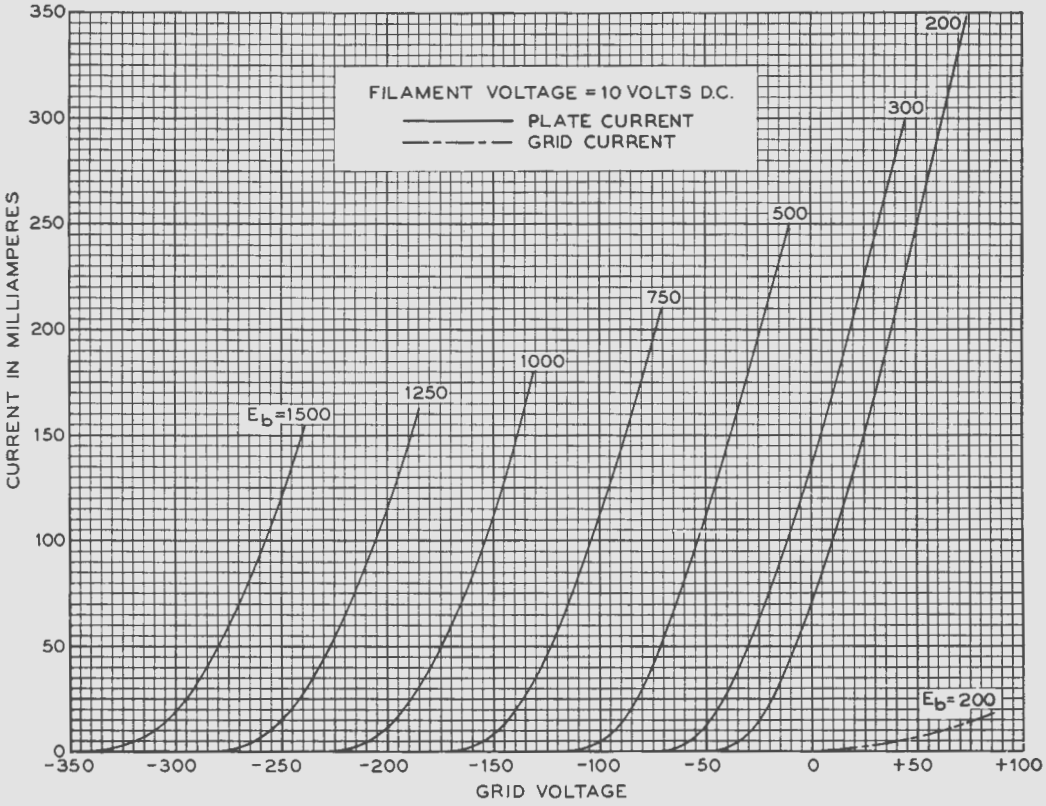

FIG. 3