Western Electric

310B and 348A Vacuum Tubes

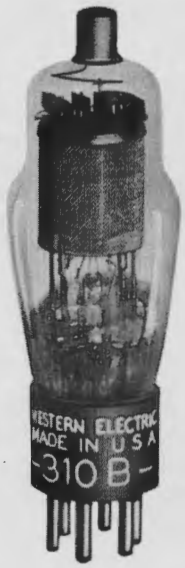

Classification—Voltage amplifier, suppressor-grid pentodes with indirectly heated cathodes.

The 310B and 348A tubes differ in heater ratings, type of base and type of grid cap. In all other respects they are identical. They are designed to minimize hum produced by alternating current operation of the heater and to minimize microphonic noise.

The tubes are intended for use in audio-frequency amplifiers where exceptionally low tube noise is required. They may also be used as radio-frequency voltage amplifiers, oscillators or modulators. The connection for the suppressor grid has been brought out to an external terminal, thus making the tubes more flexible in their applications.

Dimensions and Connections—The outline diagrams of the tube and base giving the dimensions and the arrangement of electrode connections to the base terminals for the 310B tube are shown in Figures 1 and 2. Similar information for the 348A tube is shown in Figures 3 and 4.

Base and Mounting—The 310B tube employs a small six-pin thrust type base with silver-plated pins. It is adapted for use in a standard six-contact type socket, preferably one provided with silver-plated contacts such as the Western Electric 144B socket. The control-grid terminal is a small metal cap located at the top of the bulb.

The 348A tube employs a small shell octal, seven-pin base. The control-grid terminal is a skirted miniature metal cap located at the top of the bulb.

The tubes may be mounted in any position.

Copyright, 1939, Western Electric Company, Incorporated

Average Direct Interelectrode Capacitances

	A	B
Control grid to plate	0.025	0.007 μμf
Control grid to heater, cathode, screen grid and suppressor grid	6	7 μμf
Plate to heater, cathode, screen grid and suppressor grid	15	16 μμf

Column A—Without shield.

Column B—With close fitting metal shield connected to the cathode.

Heater Ratings

	310B Tube	348A Tube	
Heater voltage	10.0	6.3	volts, ac or dc
Nominal heater current	0.32	0.50	ampere

The heaters of these tubes are designed to operate on a voltage basis and should be operated at as near to the rated voltage as is practicable.

Cathode Connection— Where alternating heater current is used the cathode should preferably be connected directly to the mid-point of the heater transformer winding or to the mid-point of a low resistance connected across the heater terminals. For direct current operation the cathode may be connected to either end of the heater. If voltage is applied between the heater and cathode, it should be kept low and must not exceed 30 volts.

Characteristics— Figures 5 and 6, respectively, show plate current and screen-grid current as functions of control-grid voltage for several values of screen-grid and plate voltage and zero suppressor-grid voltage. For all curves the plate voltage is equal to the screen-grid voltage. Plate current and screen-grid current are shown as functions of plate voltage in Figures 7 and 8, respectively, for several values of control-grid voltage, a screen-grid voltage of 135 volts and zero suppressor-grid voltage. Transconductance and plate resistance as functions of control-grid voltage are shown in Figure 9 for two values of screen-grid and plate voltage. The plate voltage in each case is equal to the screen-grid voltage and the suppressor-grid voltage is zero. Transconductance and plate resistance as functions of screen-grid voltage are shown in Figure 10 for a plate voltage of 180 volts, zero suppressor-grid voltage and two values of control-grid voltage.

Limiting Conditions For Safe Operation

Maximum plate voltage	250 volts
Maximum screen-grid voltage	180 volts
Maximum cathode current (screen-grid current plus plate current)	10 milliamperes
Maximum direct screen-grid current	2.5 milliamperes

Operating Conditions and Output—Amplification factor, plate resistance, transconductance and performance data are given in the table below for a number of typical operating conditions. Less severe operating conditions should be selected in preference to maximum operating conditions wherever possible. The life of the tube at maximum conditions will be shorter than at less severe conditions.

The performance data include the fundamental voltage and power output for the indicated values of load resistance and input voltage, and the maximum second and third harmonic levels for input voltages not exceeding the indicated values. Under certain conditions the maximum second harmonic level occurs at a lower input voltage than that given in the table. The voltage output is given in peak volts, the power output in milliwatts and the harmonic levels in decibels below the fundamental.

TABLE

Control-grid voltage = –3 volts
Screen-grid voltage = 135 volts
Suppressor-grid voltage = 0

Plate Voltage	Plate Current	Amplification Factor	Plate Resistance	Transconductance	Load Resistance	Input Voltage	Output Voltage	Output Power	Second Harmonic	Third Harmonic
Volts	Milliamperes		Megohms	Micromhos	Ohms	Peak Volts	Peak Volts	Milliwatts	db	db
135	5.5	1200	0.65	1800	20,000	3.00	100	250	22	30
					60,000	1.60	125	130	26	28
					60,000	0.95	85	60	35	45
					60,000	1.15	100	80	33	39
					100,000	0.57	75	25	35	50
					100,000	0.40	50	15	40	55
180	5.5	1800	1.00	1810	40,000	2.70	170	340	26	28
					100,000	1.50	175	156	26	30
225	5.6	2300	1.25	1830	60,000	2.70	225	425	27	27
					100,000	1.80	220	245	27	31
*250	5.6	2600	1.40	1840	60,000	2.70	240	480	26	30
					60,000	1.20	115	110	30	55
					100,000	2.10	250	320	26	29
					100,000	1.50	200	200	30	43

*Maximum plate voltage.

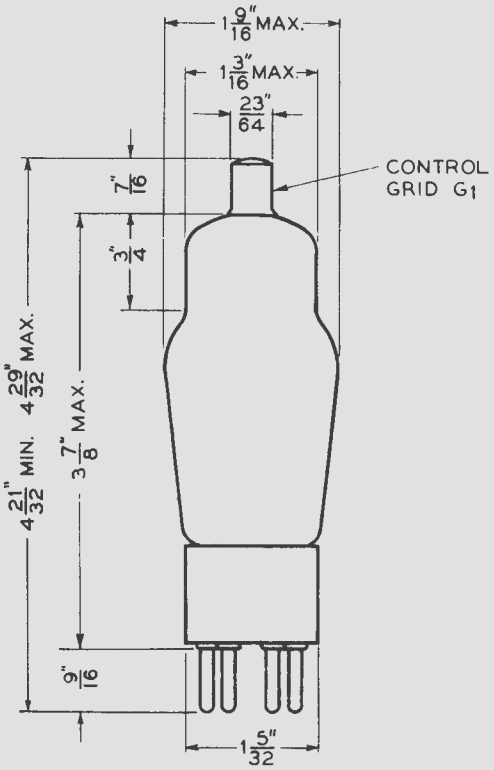

FIG. 1

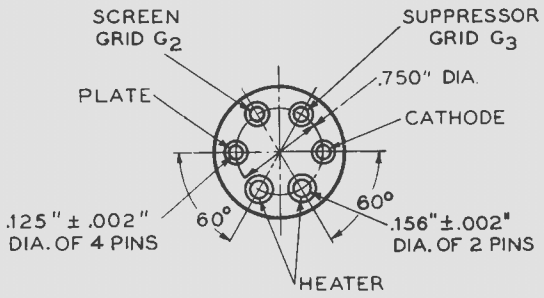

FIG. 2

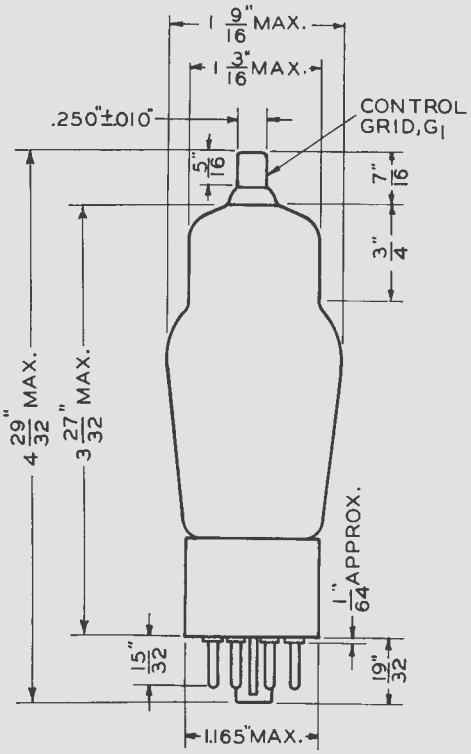

FIG. 3

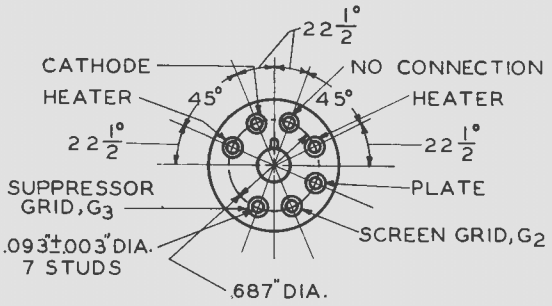

FIG. 4

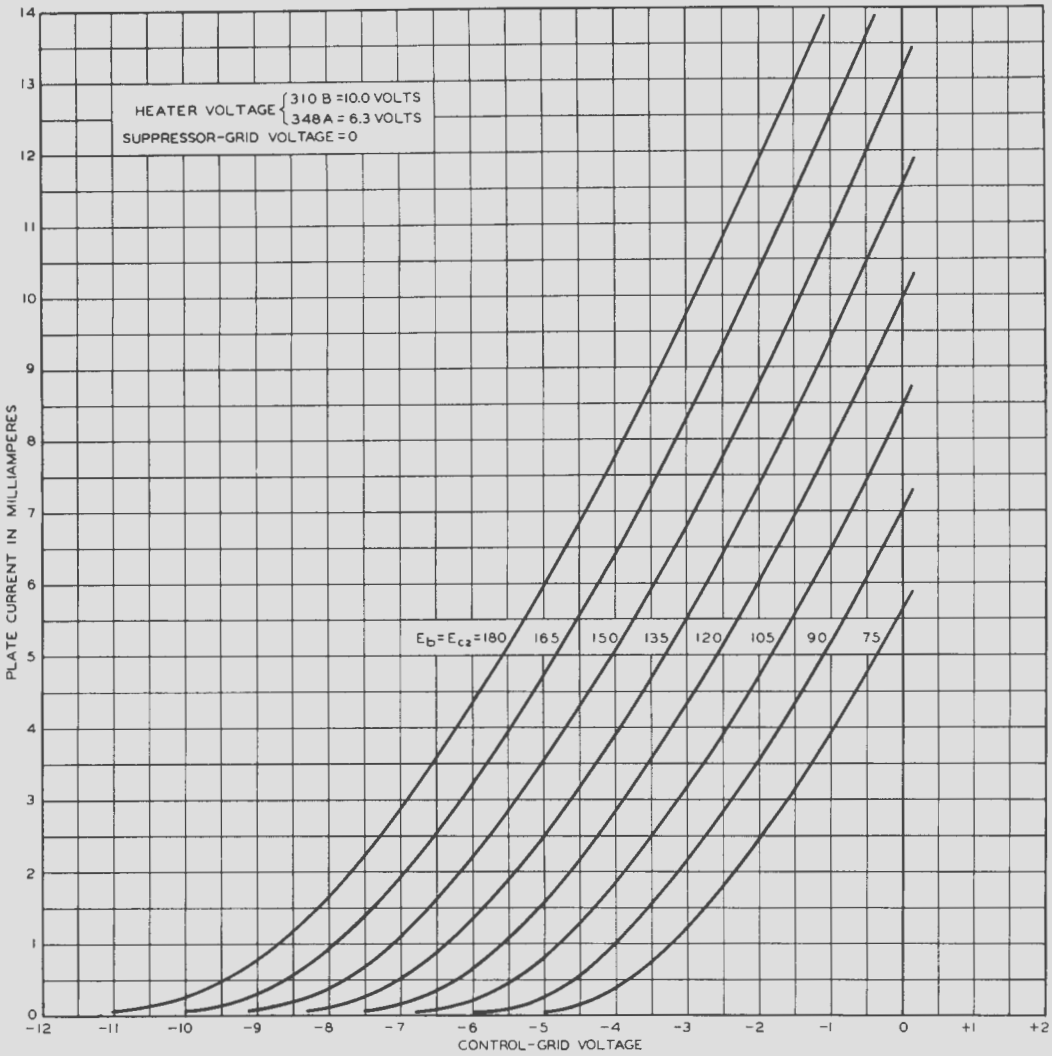
HEATER VOLTAGE { 310 B = 10.0 VOLTS
348 A = 6.3 VOLTS
SUPPRESSOR-GRID VOLTAGE = 0
$E_b = E_{c2}$ = 180 165 150 135 120 105 90 75
PLATE CURRENT IN MILLIAMPERES
CONTROL-GRID VOLTAGE
0 1 2 3 4 5 6 7 8 9 10 11 12 13 14
-12 -11 -10 -9 -8 -7 -6 -5 -4 -3 -2 -1 0 +1 +2

FIG. 5

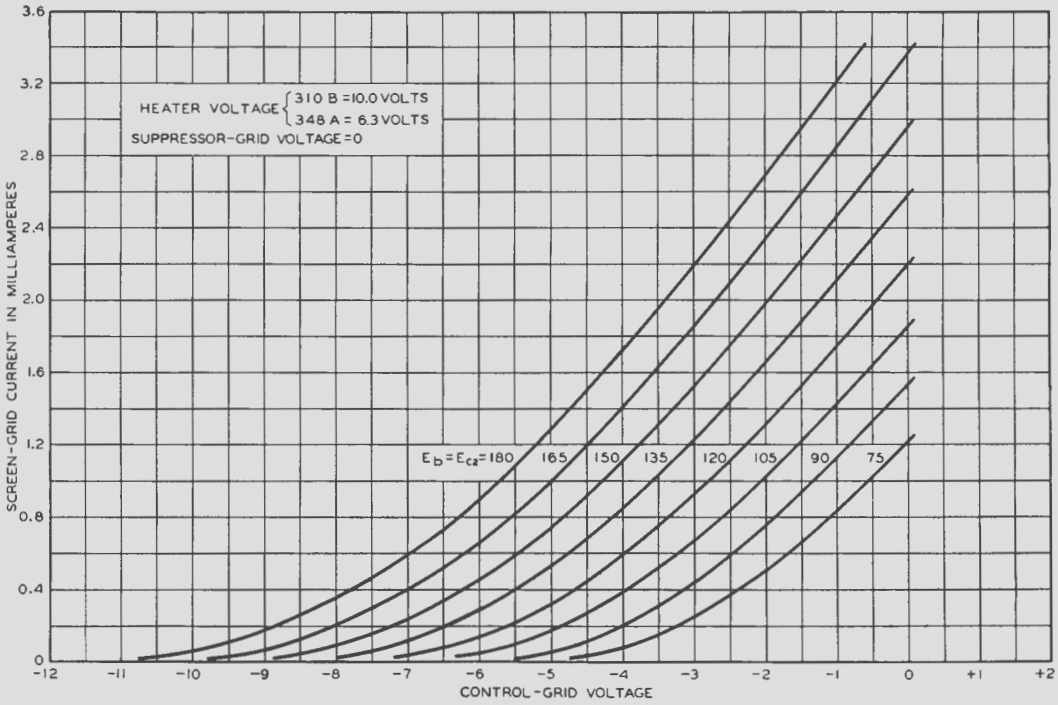
HEATER VOLTAGE { 310 B = 10.0 VOLTS
348 A = 6.3 VOLTS
SUPPRESSOR-GRID VOLTAGE = 0
$E_b = E_{c2}$ = 180 165 150 135 120 105 90 75
SCREEN-GRID CURRENT IN MILLIAMPERES
CONTROL-GRID VOLTAGE
0 0.4 0.8 1.2 1.6 2.0 2.4 2.8 3.2 3.6
-12 -11 -10 -9 -8 -7 -6 -5 -4 -3 -2 -1 0 +1 +2

FIG. 6

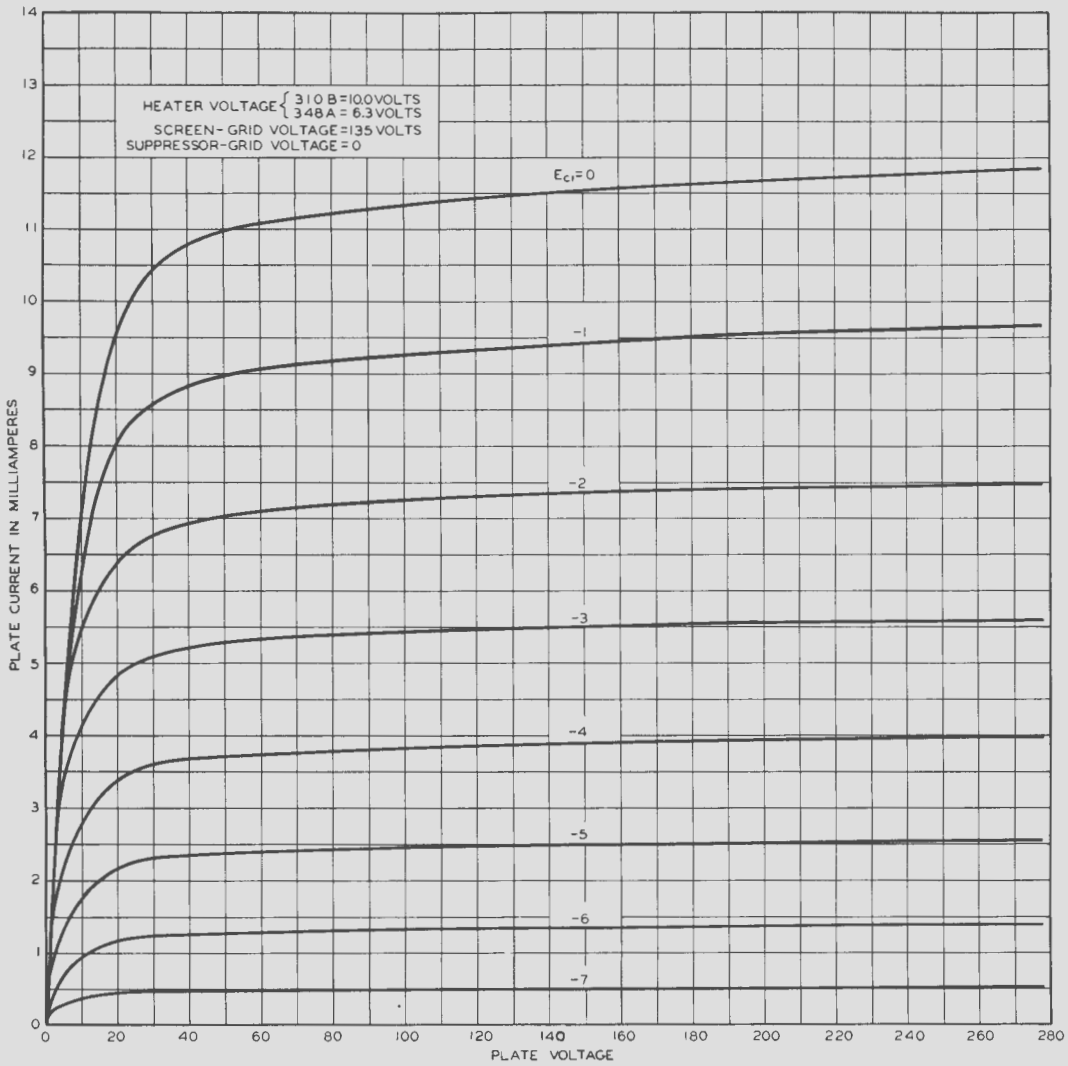
HEATER VOLTAGE { 310B = 10.0 VOLTS
348A = 6.3 VOLTS
SCREEN-GRID VOLTAGE = 135 VOLTS
SUPPRESSOR-GRID VOLTAGE = 0
$E_{c1} = 0$
-1
-2
-3
-4
-5
-6
-7
PLATE CURRENT IN MILLIAMPERES
PLATE VOLTAGE
0
1
2
3
4
5
6
7
8
9
10
11
12
13
14
20
40
60
80
100
120
140
160
180
200
220
240
260
280

FIG. 7

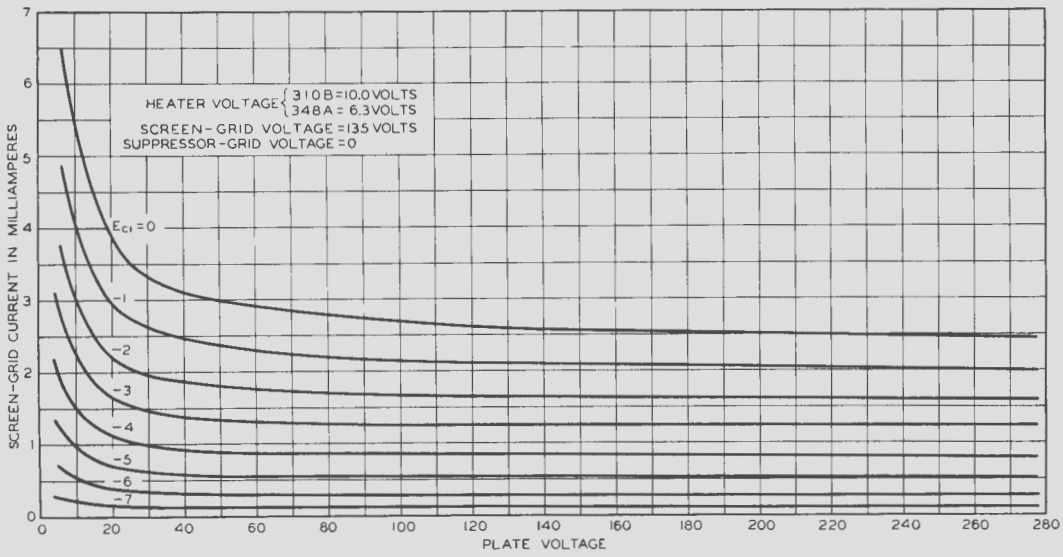
HEATER VOLTAGE { 310B = 10.0 VOLTS
348A = 6.3 VOLTS
SCREEN-GRID VOLTAGE = 135 VOLTS
SUPPRESSOR-GRID VOLTAGE = 0
$E_{c1} = 0$
-1
-2
-3
-4
-5
-6
-7
SCREEN-GRID CURRENT IN MILLIAMPERES
PLATE VOLTAGE
0
1
2
3
4
5
6
7
20
40
60
80
100
120
140
160
180
200
220
240
260
280

FIG. 8

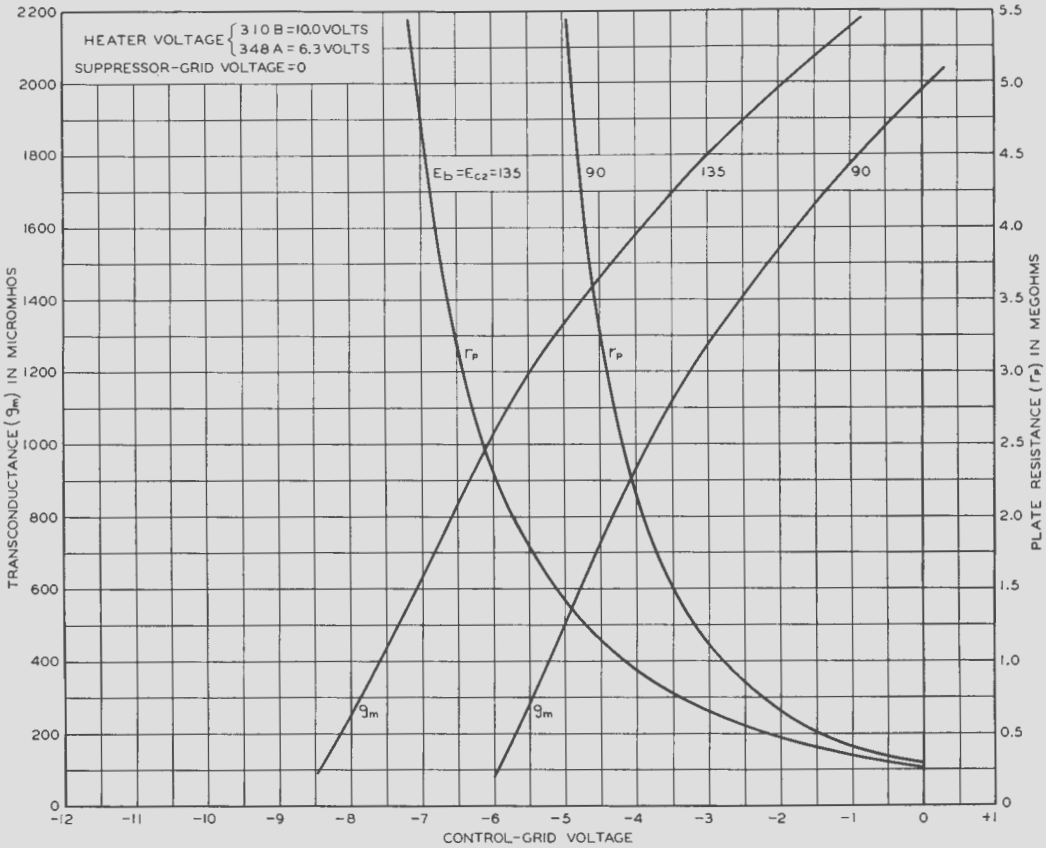
HEATER VOLTAGE { 310B = 10.0 VOLTS
348A = 6.3 VOLTS
SUPPRESSOR-GRID VOLTAGE = 0
$E_b = E_{c2} = 135$
90
135
90
r_p
r_p
g_m
g_m
TRANSCONDUCTANCE (g_m) IN MICROMHOS
PLATE RESISTANCE (r_p) IN MEGOHMS
CONTROL-GRID VOLTAGE
0
200
400
600
800
1000
1200
1400
1600
1800
2000
2200
0.5
1.0
1.5
2.0
2.5
3.0
3.5
4.0
4.5
5.0
5.5
-12
-11
-10
-9
-8
-7
-6
-5
-4
-3
-2
-1
0
+1

FIG. 9

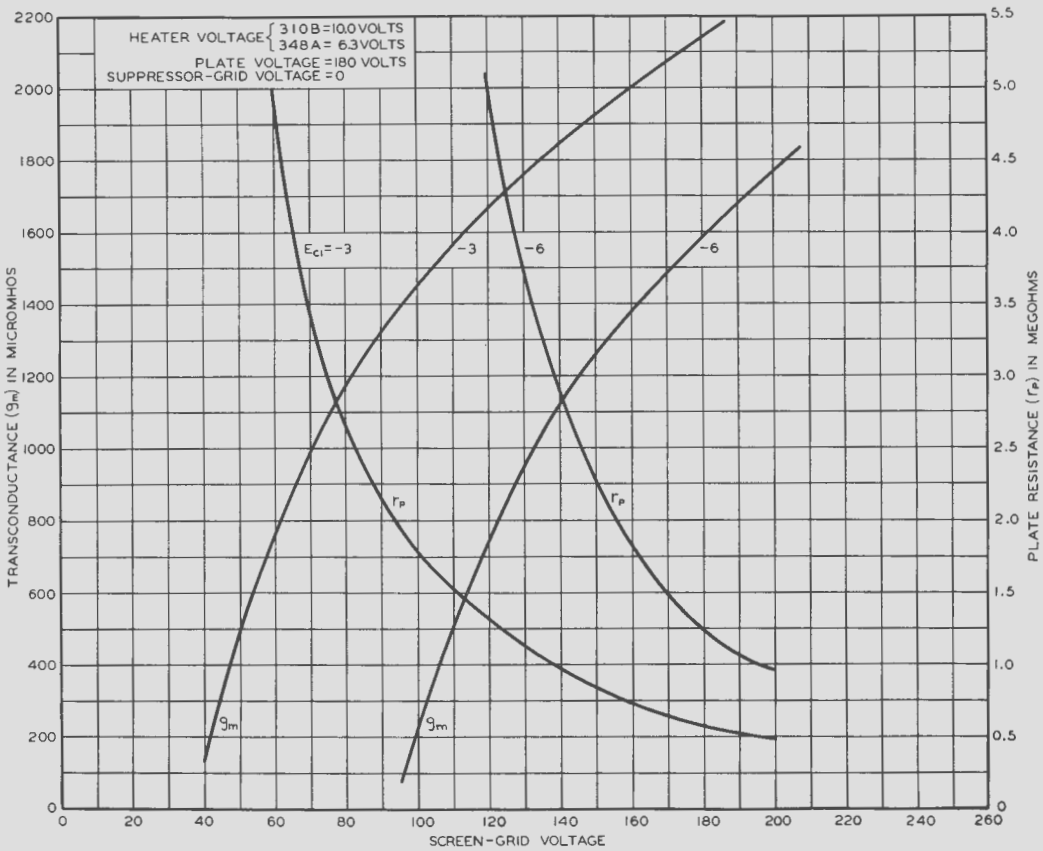
HEATER VOLTAGE { 310B = 10.0 VOLTS
348A = 6.3 VOLTS
PLATE VOLTAGE = 180 VOLTS
SUPPRESSOR-GRID VOLTAGE = 0
$E_{c1} = -3$
-3
-6
-6
r_p
r_p
g_m
g_m
TRANSCONDUCTANCE (g_m) IN MICROMHOS
PLATE RESISTANCE (r_p) IN MEGOHMS
SCREEN-GRID VOLTAGE
0
200
400
600
800
1000
1200
1400
1600
1800
2000
2200
0.5
1.0
1.5
2.0
2.5
3.0
3.5
4.0
4.5
5.0
5.5
0
20
40
60
80
100
120
140
160
180
200
220
240
260

FIG. 10

Western Electric

1-I-39-6M
PRINTED IN U.S.A.

Developments of Bell Telephone Laboratories, Incorporated, research laboratories of the American Telephone and Telegraph Company and the Western Electric Company