Western Electric

Vacuum Tubes

Half-Wave Mercury Vapor Rectifiers

249B	**255B**	**266B**	**267B**	**319A**
253A	**258B**	**266C**	**315A**	**321A**

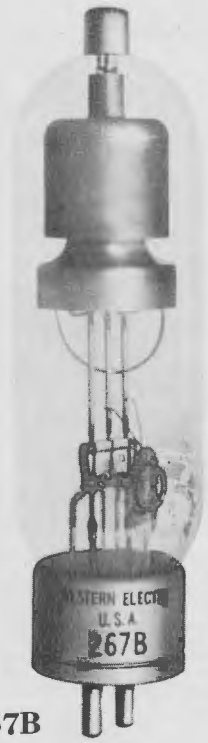

267B

253A

319A

249B

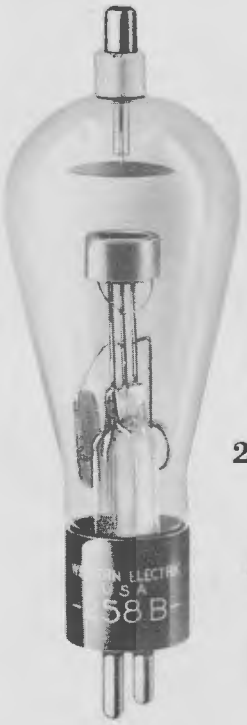

258B

NOTE:

This combined bulletin supersedes data sheets previously issued for the individual tubes.

315A

321A

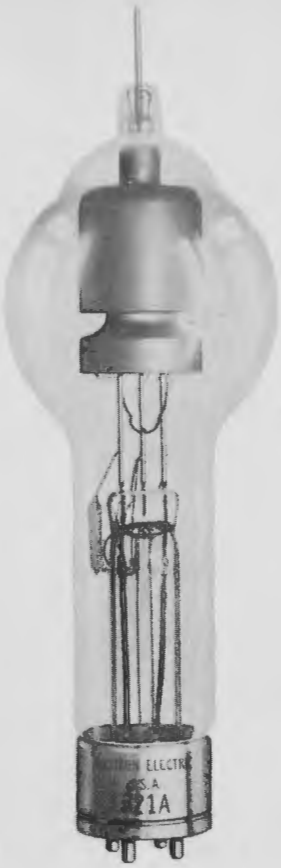

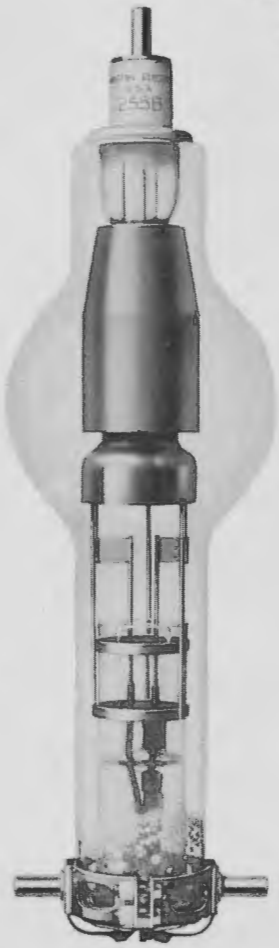

255B

266B

266C

Classification

These tubes are half-wave, thermionic, mercury vapor rectifiers designed to supply direct-current from an alternating-current supply.

Mounting—The tubes should be mounted only in a vertical position with the base or filament end down. Free air circulation must be provided. No object should touch the glass bulb.

Filament—The filaments are designed to operate from alternating current sources. The voltage should be maintained to within 5% of the rated value. Operation of the filaments at a voltage above the upper limit will definitely reduce the life of the tubes while a decrease in voltage below the lower limit may cause immediate failure.

Normal Filament Heating

The anode voltage should not be applied until the filaments have reached a satisfactory operating temperature. When normal filament voltage and circuits with good regulation are used, the minimum time required is specified on the individual tube data sheet as the "Required Heating Time." It is also necessary to allow sufficient filament heating time to evaporate any visible mercury deposits from the upper parts of the tubes.

When the tubes are put into operation at low ambient temperatures, an extended filament heating time is necessary to raise the mercury vapor pressure to a satisfactory operating value. This time is given in graph form on the individual tube data sheet for tubes requiring such heating when operating within the recommended ambient temperature range. A filament heating period of 30 minutes or more should be allowed when the tubes are used for the first time or if they have been subjected to extensive handling or prolonged standing.

Accelerated Filament Heating

In certain applications it may be desirable to reduce the "Required Heating Time" designated for normal filament voltage. This may be accomplished by applying an overvoltage to the filament for a short period after which the rated filament voltage and the anode voltage is applied. The recommended open circuit overvoltage and the corresponding period of application are given on the individual tube data sheet. These ratings apply when the regulation of the filament supply circuit is 10% ± 4%.

Tube Voltage Drop

The tube voltage drop is substantially independent of the anode current. The exact value varies but under the specified operating conditions will normally be between 5 and 25 volts.

Maximum Anode Current

The maximum permissible instantaneous and average anode current ratings are limitations on the current values that the tubes can carry safely in the direction in which they are designed to conduct and should not be exceeded. The current ratings specified under "In-phase Operation" apply when the filament and anode voltages are in phase, or where the relative phase angle is ignored. The "Quadrature Operation" ratings may be used when the circuit is designed so that the phase angle between the filament and anode voltage is approximately 90 electrical degrees. With this type of operation, the filament current goes through zero near the center of the anode conduction period, resulting in a balanced operating condition for the filament, which permits the higher anode currents.

Maximum Peak Inverse Anode Voltage

The maximum permissible peak inverse anode voltage is a limitation on the instantaneous value that the tubes can stand safely in the opposite direction to that in which they are designed to conduct. If this voltage is exceeded an arc-back may result which may injure the tubes. The maximum direct output voltage available is not fixed but will depend upon the type of circuit used.

Tubes of the same type may be operated in parallel if some provision is made to insure a proper division of the load current. Current dividing reactors or ballasting resistors in series with each anode may be used for this purpose. The size of the reactors or resistors will depend upon the circuit design.

In most cases the termination of useful life of these tubes is due to the loss of filament activity which frequently results in arc-back. Failures of this kind should be safeguarded by proper overload protection to prevent injury to other tubes in the set and to auxiliary equipment. In most circuits this requires a quick acting high-voltage fuse in each anode lead or an equally fast primary fuse or circuit breaker.

Circuits

These tubes may be used in any conventional rectifier circuit subject to the current, voltage and temperature ratings. Typical circuits are shown below. The approximate direct output current and voltage for each type of rectifier circuit where tubes are operated at maximum permissible anode current and inverse voltage is given on the individual tube data sheet. The values listed are average values of the pulsating current and voltage for an unfiltered circuit.

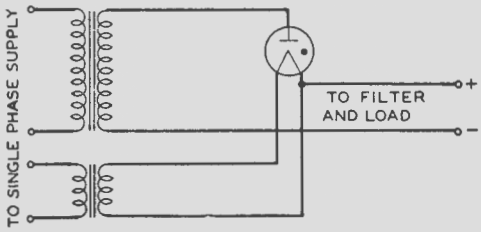

SINGLE PHASE, HALF-WAVE
CIRCUIT A

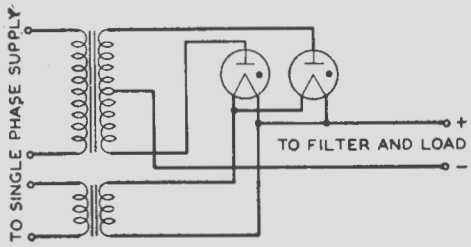

SINGLE PHASE, DOUBLE HALF-WAVE
CIRCUIT B

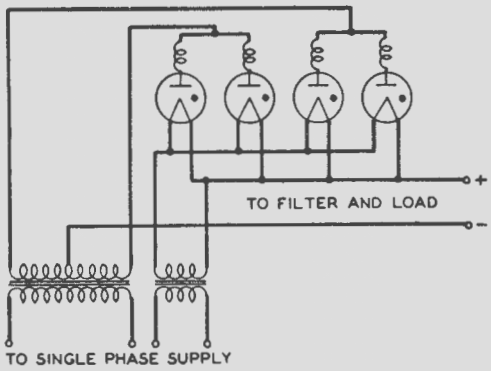

SINGLE PHASE, DOUBLE HALF-WAVE IN PARALLEL
CIRCUIT C

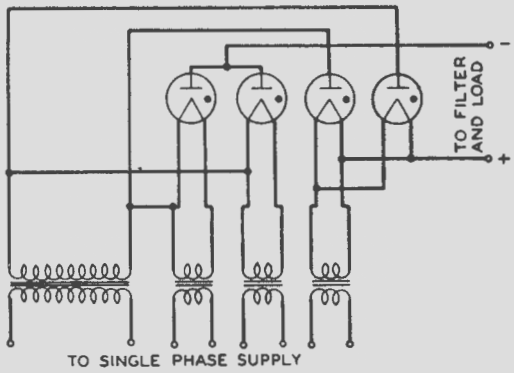

SINGLE PHASE, DOUBLE HALF-WAVE
4 TUBE SERIES CIRCUIT
CIRCUIT D

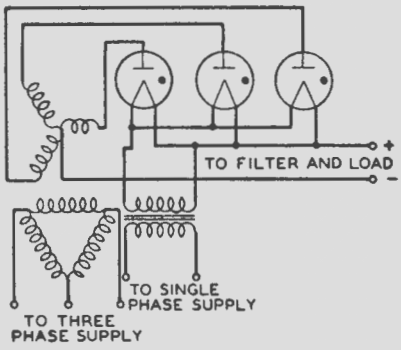

THREE PHASE "Y" CIRCUIT
CIRCUIT E

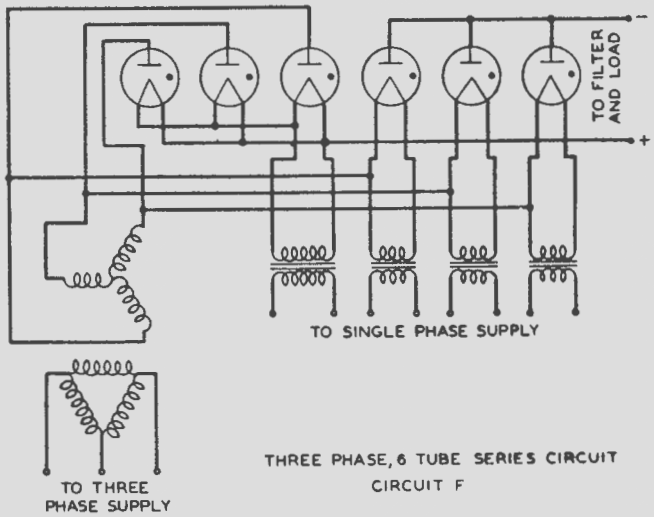

THREE PHASE, 6 TUBE SERIES CIRCUIT
CIRCUIT F

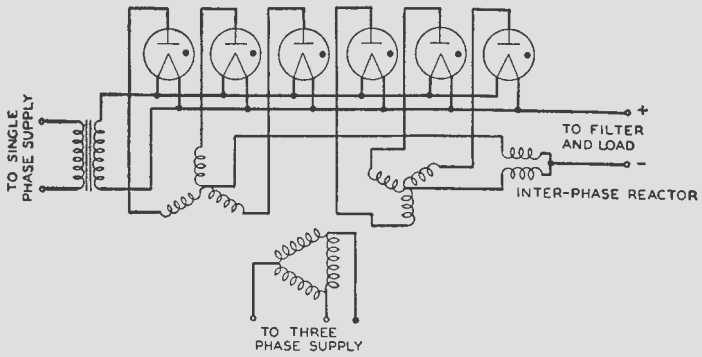

THREE PHASE, DOUBLE "Y" INTERCONNECTED
CIRCUIT G

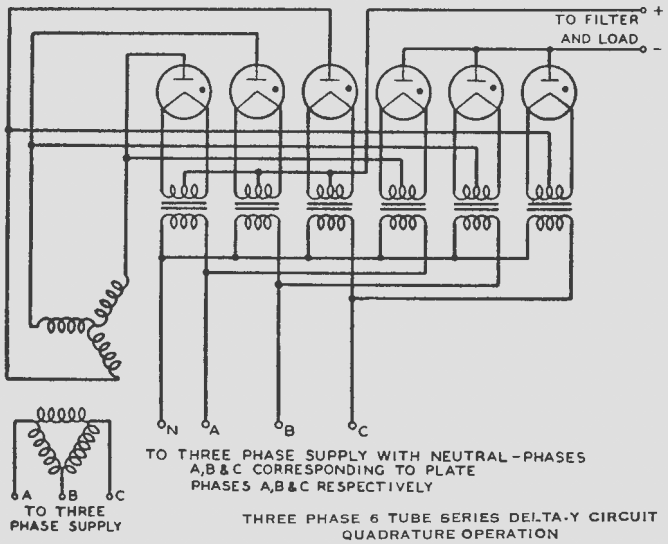

TO THREE PHASE SUPPLY WITH NEUTRAL-PHASES A,B&C CORRESPONDING TO PLATE PHASES A,B&C RESPECTIVELY

THREE PHASE 6 TUBE SERIES DELTA-Y CIRCUIT
QUADRATURE OPERATION
CIRCUIT H

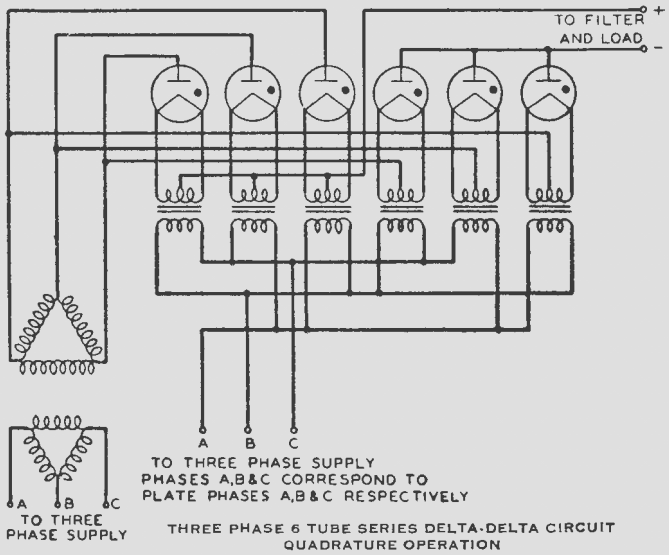

TO THREE PHASE SUPPLY
PHASES A,B&C CORRESPOND TO
PLATE PHASES A,B&C RESPECTIVELY

THREE PHASE 6 TUBE SERIES DELTA-DELTA CIRCUIT
QUADRATURE OPERATION
CIRCUIT I

249B and 258B Vacuum Tubes

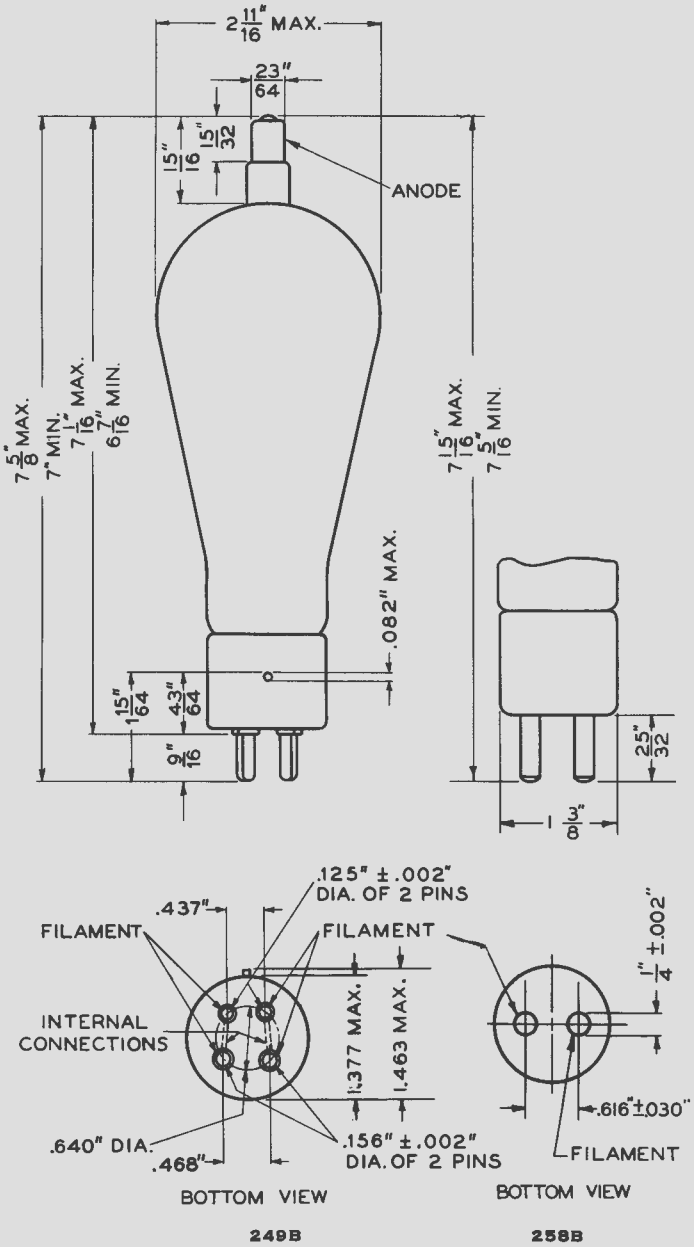

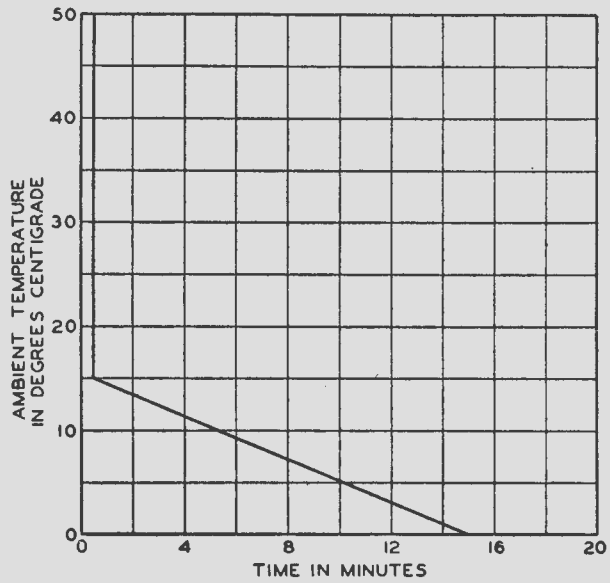

MINIMUM FILAMENT WARMING TIME VS. AMBIENT TEMPERATURE

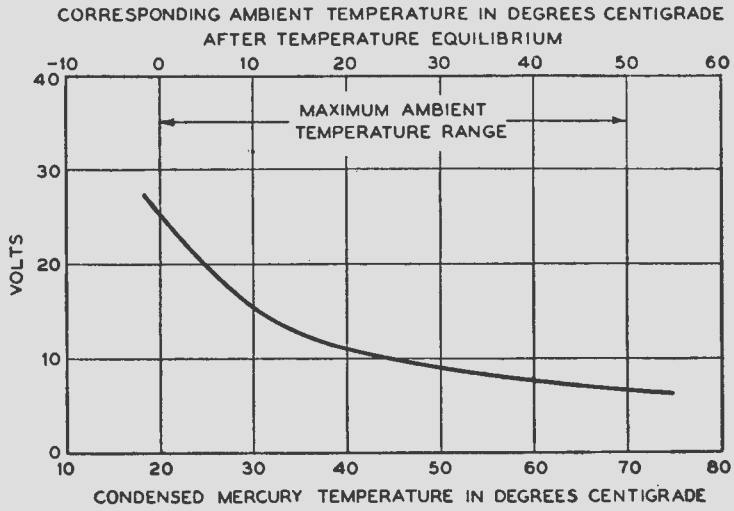

TUBE VOLTAGE DROP VS. TEMPERATURE FOR A TYPICAL TUBE

Ratings

Filament	
Voltage	2.5 volts
Nominal Current	7.5 amperes
Required Heating Time	15 seconds
Accelerated Filament Heating	
Recommended open circuit over-voltage	50%
Corresponding period of over-voltage application	8±2 seconds
Tube Voltage Drop—Approximate	15 volts
Maximum Instantaneous Anode Current	2.5 amperes
Maximum Average Anode Current	0.64 ampere
Max. Time of Averaging Anode Current	5 seconds
Maximum Peak Inverse Anode Voltage	7.5 kilovolts
Maximum Ambient Temperature Range	0 to 50°C.

Mounting—The 249B tube requires a W. E. 143B or similar socket and the 258B a W. E. 138B, 139A or similar socket. A spring clip anode terminal connector is required. Mount in vertical position only—base end down. A clearance of at least 2 inches should be allowed between the bulb and any adjacent object.

Circuit Outputs:

Circuit Designation	Number of Tubes	Output Voltage At 7.5 kv. Inverse Voltage	Load Current In DC Amperes
A	1	2300	0.64
B	2	2300	1.28
C	4	2300	2.56
D	4	4600	1.28
E	3	3500	1.92
F	6	7000	1.92
G	6	3000	3.2

253A Vacuum Tube

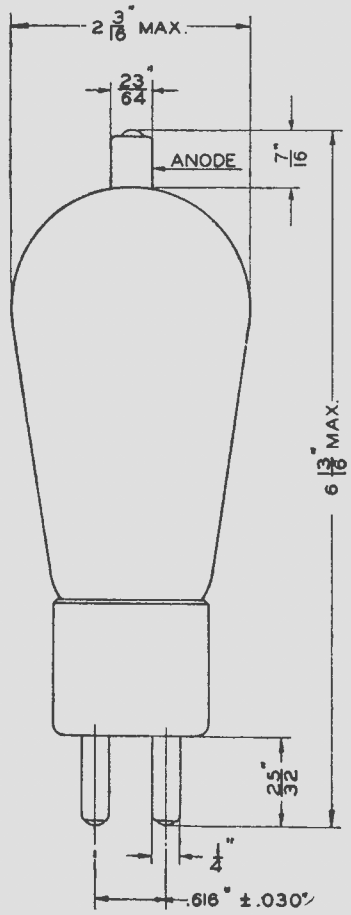

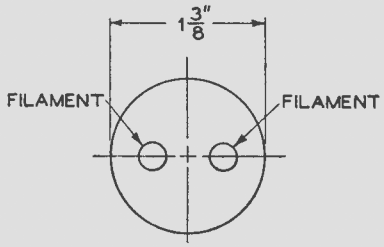

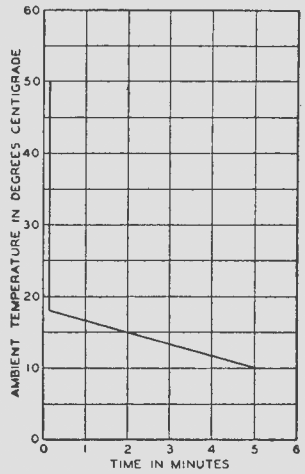

MINIMUM FILAMENT WARMING TIME VS. AMBIENT TEMPERATURE

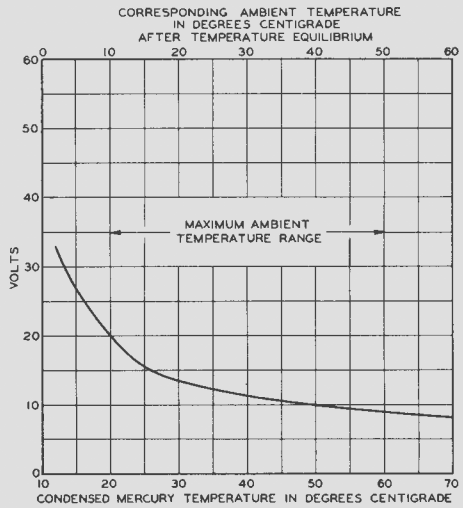

TUBE VOLTAGE DROP VS. TEMPERATURE FOR A TYPICAL TUBE

Ratings

Filament	
Voltage	2.5 volts
Nominal Current	3.0 amperes
Required Heating Time	10 seconds
Accelerated Filament Heating	
Recommended open circuit over-voltage	50%
Corresponding period of over-voltage application	6 ± 2 seconds
Tube Voltage Drop—Approximate	15 volts
Maximum Instantaneous Anode Current	1.0 ampere
Maximum Average Anode Current	0.25 ampere
Max. Time of Averaging Anode Current	5 seconds
Maximum Peak Inverse Anode Voltage	3500 volts
Maximum Ambient Temperature Range	10 to 50° C.

Mounting—W. E. 138B, 139A or similar socket. A spring clip anode terminal connector is required. Mount in vertical position only—base end down. A clearance of at least 1½ inches should be allowed between the bulb and any adjacent object.

Circuit Outputs:

Circuit Designation	Number of Tubes	Output Voltage At 3500 volts Inverse Voltage	Load Current In DC Amperes
A	1	1000	0.25
B	2	1000	0.50
C	4	1000	1.00
D	4	2000	0.50
E	3	1500	0.75
F	6	3000	0.75
G	6	1400	1.25

255B Vacuum Tube

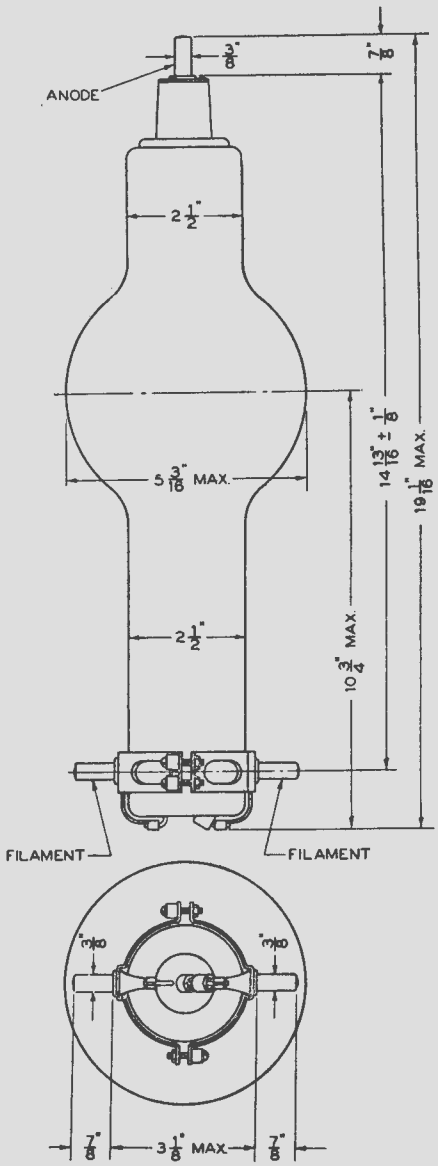

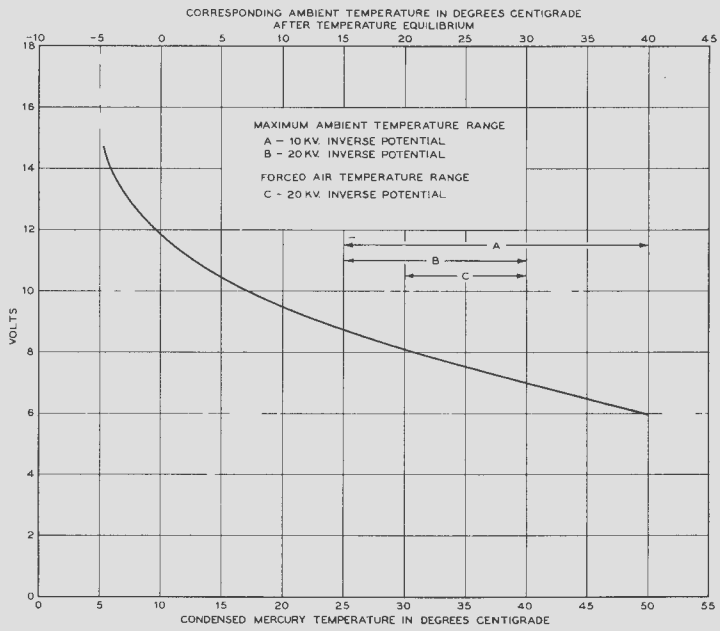

TUBE VOLTAGE DROP VS. TEMPERATURE FOR A TYPICAL TUBE

Maximum Peak Inverse Anode Voltage

at 15 to 30° C. ambient temperature	20 kilovolts
at 15 to 40° C. ambient temperature	10 kilovolts
at 30 to 40° C. forced air temperature	20 kilovolts

This is the temperature of the forced air applied to the bulb where the free mercury condenses. Approximately 6 cu. ft. per minute from a 1 inch nozzle and directed just above the support collar is recommended.

Mounting—Special mounting is required. Mount in vertical position only—filament end down. A clearance of at least 4 inches should be allowed between the bulb and any adjacent object. Connection to the anode terminal should be semi-flexible.

Ratings

Filament	
Voltage	5.0 volts
Nominal Current	19.0 amperes
Required Heating Time	120 seconds
Accelerated Filament Heating	
Recommended open circuit over-voltage	50%
Corresponding period of over-voltage application	25 ± 5 seconds
Tube Voltage Drop—Approximate	10 volts
Maximum Instantaneous Anode Current	
In-Phase Operation	8 amperes
Quadrature Operation	16 amperes
Maximum Average Anode Current	
In-Phase Operation	2 amperes
Quadrature Operation	4 amperes
Max. Time of Averaging Anode Current	30 seconds

Circuit Outputs:

Circuit Designation	Number of Tubes	Output Voltage: At 10 kv. Inverse Voltage	Output Voltage: At 20 kv. Inverse Voltage	Load Current—DC Amps.: In-Phase Operation	Load Current—DC Amps.: Quadrature Operation
A	1	3000	6000	2	4
B	2	3000	6000	4	8
C	4	3000	6000	8	16
D	4	6000	12000	4	8
E	3	4500	9000	6	12
F	6	9000	18000	6	—
G	6	4000	8000	10	20
H	6	9000	18000	—	12
I	6	9000	18000	—	12

266B Vacuum Tube

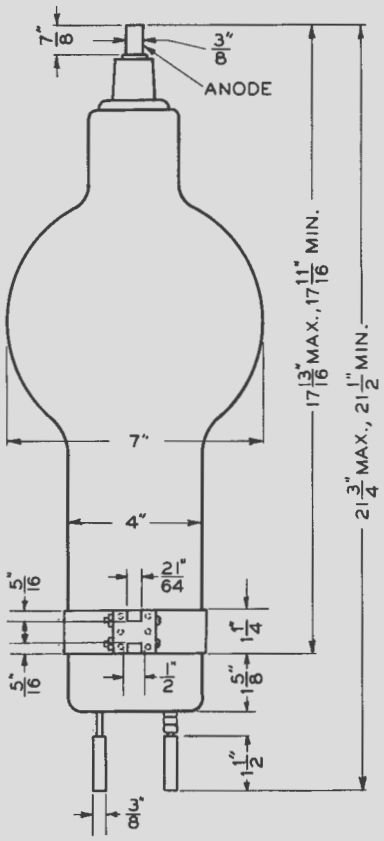

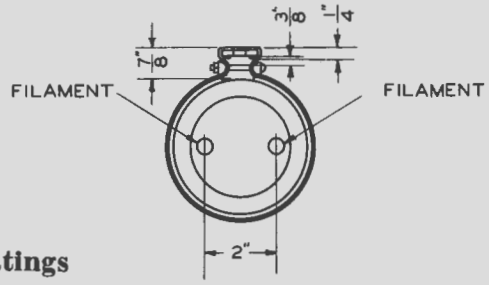

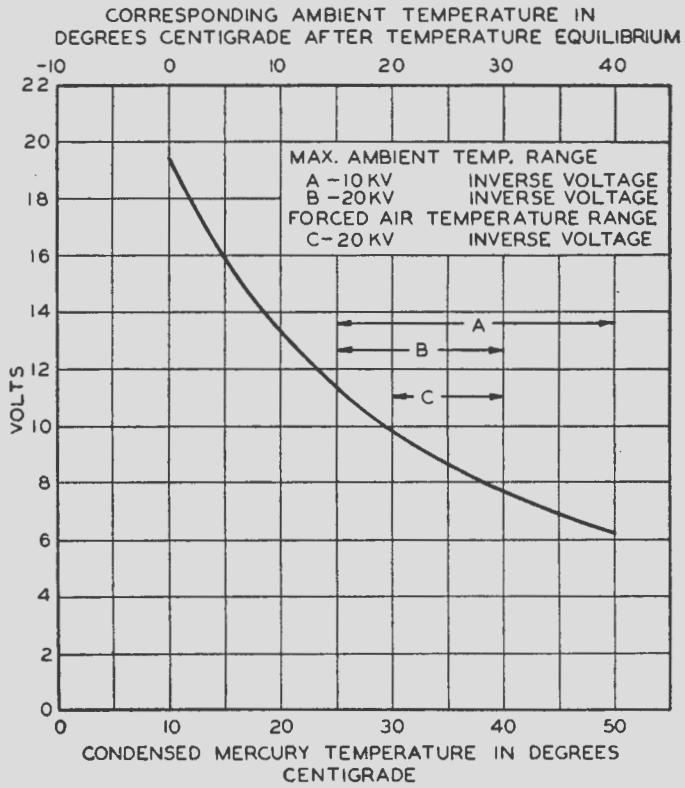

TUBE VOLTAGE DROP VS. TEMPERATURE FOR A TYPICAL TUBE

Ratings

Filament	
Voltage	5.0 volts
Nominal Current	42.0 amperes
Required Heating Time	300 seconds
Accelerated Filament Heating	
Recommended open circuit over-voltage	50%
Corresponding period of over-voltage application	30 ± 5 seconds
Tube Voltage Drop—Approximate	15 volts
Maximum Instantaneous Anode Current	
In-Phase Operation	20 amperes
Quadrature Operation	40 amperes
Maximum Average Anode Current	
In-Phase Operation	5 amperes
Quadrature Operation	10 amperes
Max. Time of Averaging Anode Current	60 seconds
Maximum Peak Inverse Anode Voltage	
at 15 to 30° C. ambient temperature	20 kilovolts
at 15 to 40° C. ambient temperature	10 kilovolts
at 30 to 40° C. forced air temperature	20 kilovolts

This is the temperature of the forced air applied to the bulb where the free mercury condenses. Approximately 8 cu. ft. per minute from a 1 inch nozzle and directed just below the support collar is recommended.

Mounting—Special mounting is required. Mount in vertical position only, filament end down. A clearance of at least 4 inches should be allowed between the bulb and any adjacent object. Connections to the filament and anode terminals should be flexible.

Circuit Outputs:

Circuit Designation	Number of Tubes	Output Voltage: At 10 kv. Inverse Voltage	Output Voltage: At 20 kv. Inverse Voltage	Load Current—DC Amps.: In-Phase Operation	Load Current—DC Amps.: Quadrature Operation
A	1	3000	6000	5	10
B	2	3000	6000	10	20
C	4	3000	6000	20	40
D	4	6000	12000	10	20
E	3	4500	9000	15	30
F	6	9000	18000	15	—
G	6	4000	8000	25	50
H	6	9000	18000	—	30
I	6	9000	18000	—	30

266C Vacuum Tube

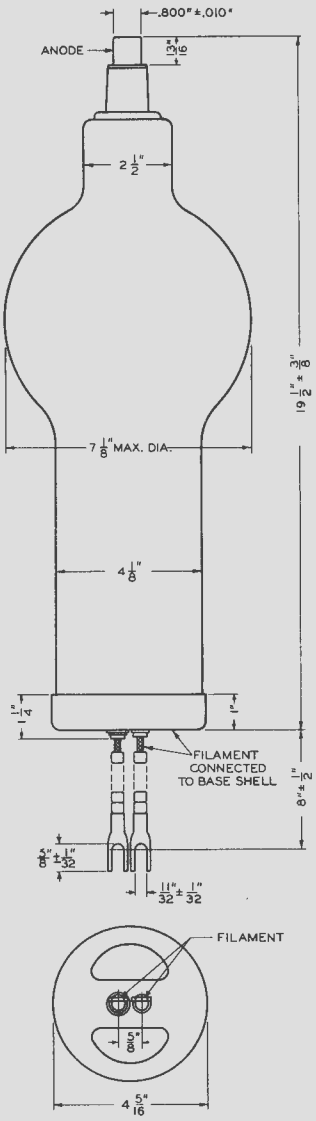

FIG. 1

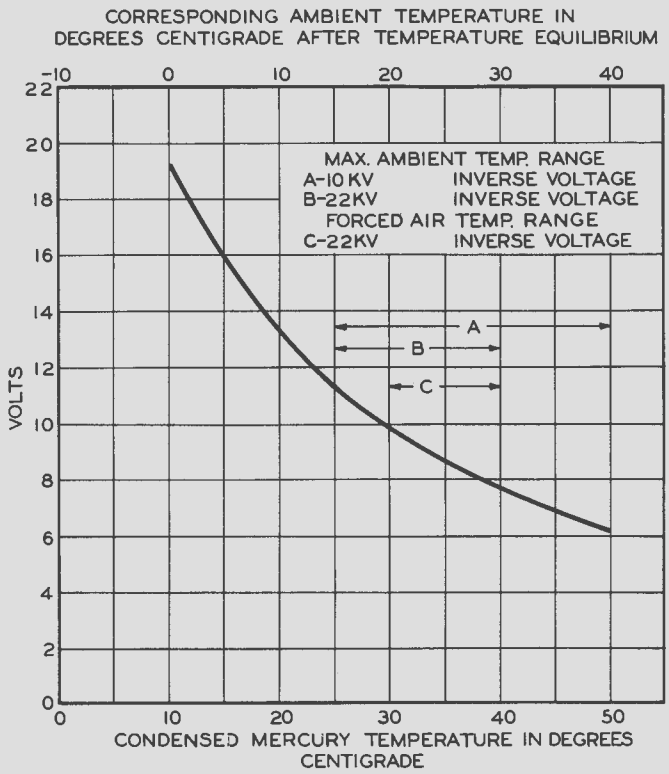

TUBE VOLTAGE DROP VS. TEMPERATURE FOR A TYPICAL TUBE

Ratings

Filament	
Voltage	5.0 volts
Nominal Current	42.0 amperes
Required Heating Time	300 seconds
Accelerated Filament Heating	
Recommended open circuit over-voltage	50%
Corresponding period of over-voltage application	30 ± 5 seconds
Tube Voltage Drop—Approximate	15 volts
Maximum Instantaneous Anode Current	
In-Phase Operation	20 amperes
Quadrature Operation	40 amperes
Maximum Average Anode Current	
In-Phase Operation	5 amperes
Quadrature Operation	10 amperes
Max. Time of Averaging Anode Current	60 seconds
Maximum Peak Inverse Anode Voltage	
at 15 to 30° C. ambient temperature	22 kilovolts
at 15 to 40° C. ambient temperature	10 kilovolts
at 30 to 40° C. forced air temperature	22 kilovolts

This is the temperature of the forced air applied to the bulb where the free mercury condenses. Approximately 5 cu. ft. per minute from a 1 inch nozzle and directed ½" above the filament base is recommended.

Mounting—Special mounting is required. Mount in vertical position only, filament end down. A clearance of at least 4 inches should be allowed between the bulb and any adjacent object. Connection to the anode terminal should be flexible.

Circuit Outputs:

Circuit Designation	Number of Tubes	Output Voltage: At 10 kv. Inverse Voltage	Output Voltage: At 22 kv. Inverse Voltage	Load Current—DC Amps.: In-Phase Operation	Load Current—DC Amps.: Quadrature Operation
A	1	3000	6500	5	10
B	2	3000	6500	10	20
C	4	3000	6500	20	40
D	4	6000	13000	10	20
E	3	4500	10000	15	30
F	6	9000	20000	15	—
G	6	4000	9000	25	50
H	6	9000	20000	—	30
I	6	9000	20000	—	30

267B and 319A Vacuum Tubes

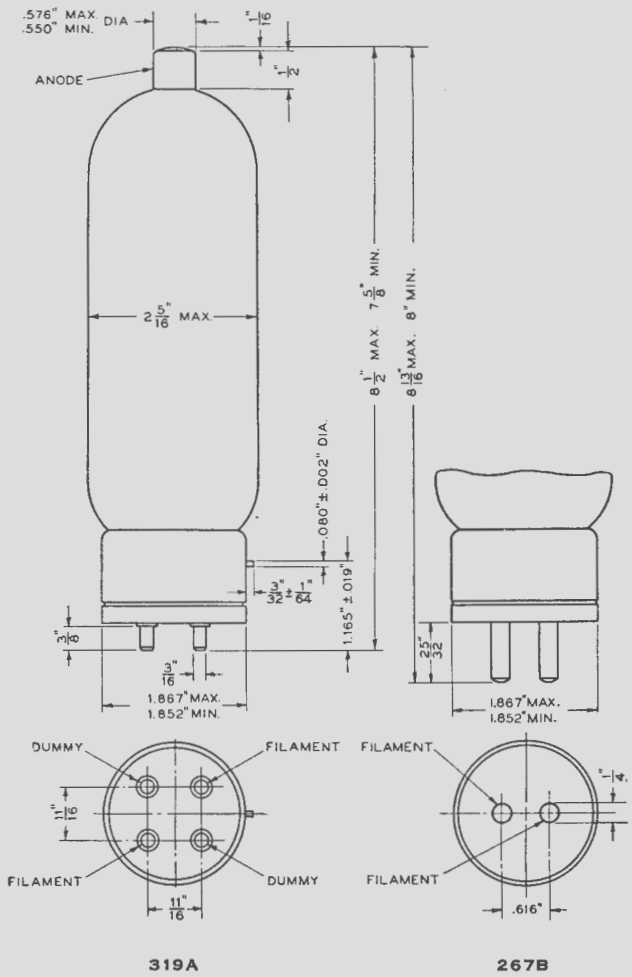

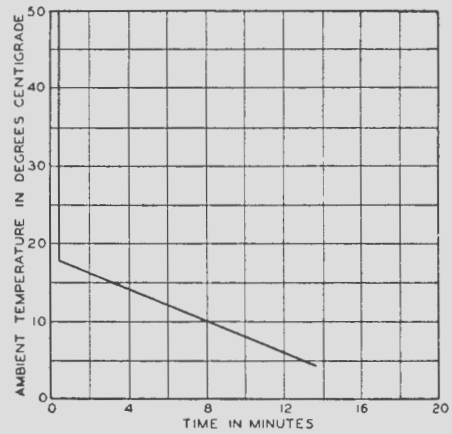

MINIMUM FILAMENT WARMING TIME VS. AMBIENT TEMPERATURE

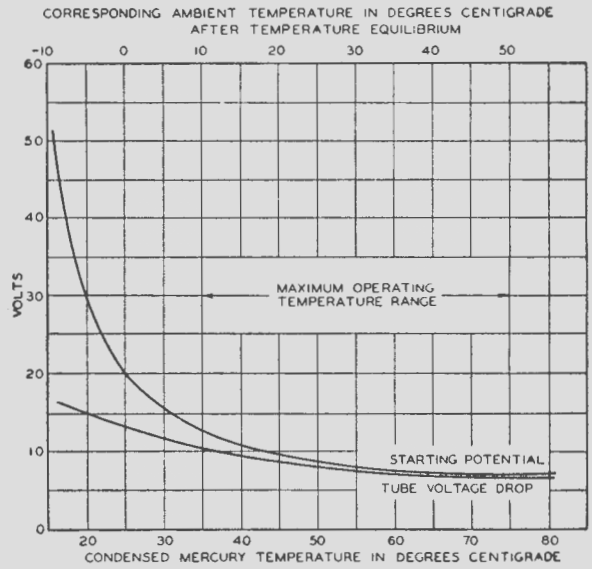

OPERATING CHARACTERISTICS FOR A TYPICAL TUBE

Ratings

Filament	
Voltage	5.0 volts
Nominal Current	6.75 amperes
Required Heating Time	30 seconds
Accelerated Filament Heating	
Recommended open circuit over-voltage	50%
Corresponding period of over-voltage application	8 ± 2 seconds
Tube Voltage Drop—Approximate	10 volts
Maximum Instantaneous Anode Current	
In-Phase Operation	4 amperes
Quadrature Operation	8 amperes
Maximum Average Anode Current	
In-Phase Operation	1 ampere
Quadrature Operation	2 amperes
Max. Time of Averging Anode Current	15 seconds
Maximum Peak Inverse Anode Voltage	7.5 kilovolts
Maximum Ambient Temperature Range	10 to 50° C.

Mounting—The 267B tube requires a W. E. 138B, 139A or similar socket and the 319A tube a W. E. 148A or similar socket. A spring clip anode terminal connector is required. Mount in a vertical position only—base end down. A clearance of at least 2 inches should be allowed between the bulb and any adjacent object.

Circuit Outputs:

Circuit Designation	Number of Tubes	Output Voltage: At 7.5 kv. Inverse Voltage	Load Current—DC Amps.: In-Phase Operation	Load Current—DC Amps.: Quadrature Operation
A	1	2300	1	2
B	2	2300	2	4
C	4	2300	4	8
D	4	4600	2	4
E	3	3500	3	6
F	6	7000	3	—
G	6	3000	5	10
H	6	7000	—	6
I	6	7000	—	6

315A and 321A Vacuum Tubes

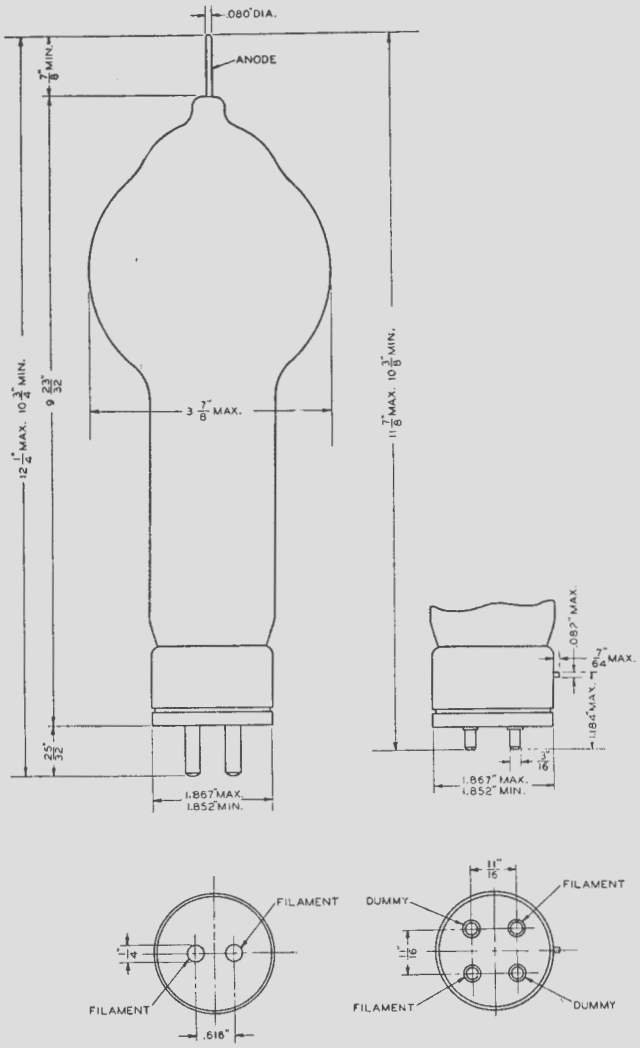

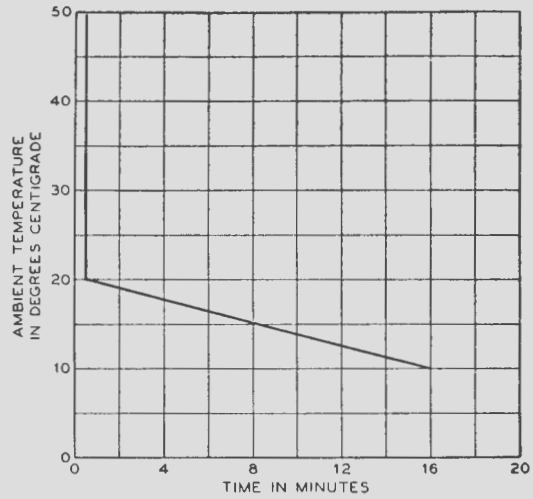

MINIMUM FILAMENT WARMING TIME VS. AMBIENT TEMPERATURE

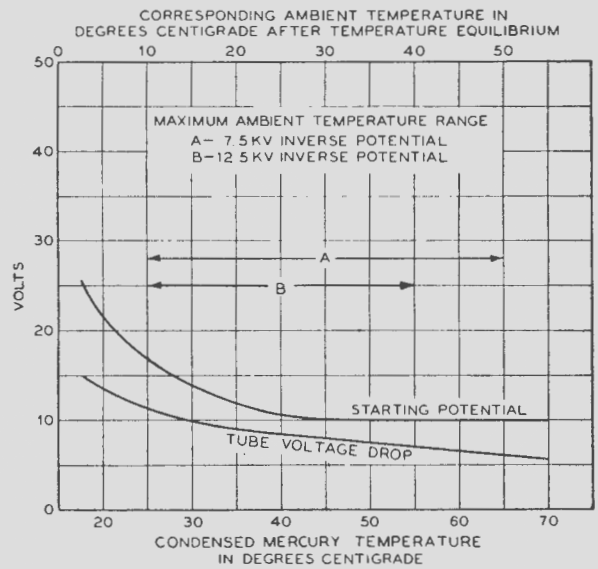

OPERATING CHARACTERISTICS FOR A TYPICAL TUBE

Ratings

Filament	
Voltage	5.0 volts
Nominal Current	10.0 amperes
Required Heating Time	30 seconds
Accelerated Filament Heating	
Recommended open circuit over-voltage	50%
Corresponding period of over-voltage application	15 ± 5 seconds
Tube Voltage Drop—Approximate	10 volts
Maximum Instantaneous Anode Current	
In-Phase Operation	4 amperes
Quadrature Operation	8 amperes
Maximum Average Anode Current	
In-Phase Operation	1 ampere
Quadrature Operation	2 amperes
Max. Time of Averaging Anode Current	15 seconds
Maximum Peak Inverse Anode Voltage	
at 10 to 40° C. ambient temperature	12.5 kilovolts
at 10 to 50° C. ambient temperature	7.5 kilovolts

Mounting—The 315A tube requires a 138B, 139A or similar socket and the 321A a W. E. 148A or similar socket. A special anode terminal connector is required. Mount in a vertical position only—base end down. A clearance of at least 3 inches should be allowed between the bulb and any adjacent object.

Circuit Outputs:

Circuit Designation	Number of Tubes	Output Voltage: At 7.5 kv. Inverse Voltage	Output Voltage: At 12.5 kv. Inverse Voltage	Load Current—DC Amps.: In-Phase Operation	Load Current—DC Amps.: Quadrature Operation
A	1	2300	3800	1	2
B	2	2300	3800	2	4
C	4	2300	3800	4	8
D	4	4600	7600	2	4
E	3	3500	5800	3	6
F	6	7000	11500	3	—
G	6	3000	5000	5	10
H	6	7000	11500	—	6
I	6	7000	11500	—	6

Western Electric

2-G-45-5C
PRINTED IN U.S.A.

Developments of Bell Telephone Laboratories, Incorporated, research laboratories of the American Telephone and Telegraph Company and the Western Electric Company

V. T. DATA SHEETS

249B	258B	315A
253A	266B	319A
255B	266C	321A
	267B	

ISSUE 2