Western Electric

357A Vacuum Tube

Classification—Filamentary, air-cooled, high mu, triode

The 357A tube is a general purpose triode which is especially adapted to use at the higher radio frequencies since it may be used at full rating at frequencies up to 100 megacycles. It is also suitable for use at audio frequencies particularly in Class B audio amplifiers or modulators where because of its high amplification factor it requires relatively low grid biases.

The electrodes are supported entirely by their short and heavy leads directly from the hard glass envelope. The elimination of the conventional stem allows the reduction to a minimum of the overall dimensions, which together with the elimination of solid radio-frequency dielectric inside the envelope and the high amplification factor makes the tube ideal for use as an amplifier at the higher radio frequencies.

Dimensions and Connections—The outline diagrams of the tube giving the dimensions and arrangement of the electrode connections are shown in Figure 1. The overall dimensions are:

Maximum overall length	8″
Maximum diameter	5⅛″

Copyright, 1939, Western Electric Company, Incorporated

Mounting—This tube may be mounted directly from its copper terminals or in a Western Electric 153A or similar socket which receives the filament and grid terminals. These are at the bottom of the tube as shown in Figure 1. The plate terminal is at the top of the envelope. The tube must be mounted in a vertical position and preferably with the plate terminal at the top.

In mounting the tube, care must be taken not to subject the terminals to bending or twisting stresses as this may result in cracked seals or dislocated electrodes.

Filament—Thoriated tungsten

Filament voltage	10.0 volts, a.c. or d.c.
Nominal filament current	10.0 amperes
Average thermionic emission	4.0 amperes

Characteristics—Performance data given below are based upon a typical set of conditions. Variations can be expected with different circuits and tubes.

Static characteristics are shown in Figures 2 and 3.

Average Characteristics with a plate current of 0.5 ampere

Amplification factor	30
Grid to plate transconductance	9000 micromhos
Plate resistance	3300 ohms
Perveance*	800×10^{-6} amp/volt$^{3/2}$

*Y. Kusunose, Proc. I.R.E. Vol. 17, pp. 1706-1749, Oct. (1929)

Average Direct Interelectrode Capacitances

Grid to plate	4.25 $\mu\mu$f
Grid to filament	9.5 $\mu\mu$f
Plate to filament	2.5 $\mu\mu$f

Operation

Maximum Ratings

Max. direct plate voltage	4000 volts
Max. direct plate current, plate modulated condition	0.400 ampere
Max. direct plate current, other conditions	0.500 ampere
Max. continuous plate dissipation	350 watts
Max. direct grid current	0.100 ampere

Class B Audio Amplifier or Modulator for Balanced 2 Tube Circuit

Direct plate voltage	4000	3000	2000	3000*volts
Grid bias	−130	−85	−50	−85 volts
Approx. static plate current	0.120	0.120	0.160	0.120 ampere
Max. signal plate current	0.535	0.700	1.0	0.435 ampere
Load impedance plate to plate	18500	10500	4650	14700 ohms
Approx. maximum output per pair of tubes with total distortion less than 5 per cent	1625	1580	1400	850 watts
Actual driving power	30	40	50	13.5 watts

Recommended power capability of driving stage	50	60	75	25 watts
Peak grid to grid driving voltage	512	490	490	345 volts

*As high level modulator for 1000 watt transmitter. Total harmonic approx. 1.5% at full output.

Class B Radio-Frequency Linear Amplifier

Direct plate voltage	4000	3000	2000 volts
Grid bias	−140	−100	−60 volts
Direct plate current for carrier conditions	0.130	0.175	0.260 ampere
Maximum carrier power output	175	175	175 watts
Recommended power of driving stage (carrier)	10	15	40 watts
Peak grid driving voltage (carrier)	125	125	135 watts

Class C Radio-Frequency Oscillator or Power Amplifier—Unmodulated

Direct plate voltage	4000	3000	2000 volts
Grid bias	−250	−225	−200 volts
Direct plate current	0.400	0.450	0.500 ampere
Nominal power output	1250	1000	700 watts
Peak r-f grid voltage	450	445	445 volts
Plate dissipation	350	350	300 watts
Direct grid current	0.060	0.070	0.085 ampere
Approx. driving power	25	30	35 watts

Class C Radio-Frequency Amplifier—Plate Modulated

Direct plate voltage	3000	Max. 3000*	2500	2000 volts
Grid bias	−320	−270	−310	−310 volts
Direct plate current	0.340	0.240	0.360	0.390 ampere
Direct grid current (approx.)	0.065	0.035	0.060	0.070 ampere
Peak r-f grid voltage (approx.)	520	420	520	535 volts
Driving power (approx.)	35	20	35	35 watts
Nominal carrier power output for use with 100% modulation	780	550	670	550 watts

*For 500 watt Broadcast Transmitter Application.

Operating Precautions

Mechanical—Figure 1 shows the overall dimensions and basing arrangement for the tube.

The tubes should not be subjected to mechanical shock or excessive vibration. Mechanical vibration may cause breakage of the thoriated tungsten filaments.

A free circulation of air must be provided to insure adequate cooling of the glass during operation. All objects shall be at least 1 inch away from the glass bulb. If the tube is operated in a confined space or at frequencies above 40 megacycles, forced ventilation should be provided. It is desirable that the connector used at the plate terminal be able to conduct heat away from the terminal.

Electrical—Overload protection should always be provided for the plate circuit. A suitable fuse or circuit breaker should remove the plate voltage if the plate current exceeds 0.6 ampere per tube. Although the tube is sufficiently rugged to withstand momentary overloads, a prolonged overload caused by inefficient adjustment of the circuit or failure of circuit elements may damage the tube. When adjusting a new circuit, reduced plate voltage or a series resistance of 2000 to 5000 ohms in the plate circuit should be used until it is operating properly.

The filament should always be operated at the rated voltage, measured at the tube terminals. A 5% decrease in filament voltage reduces the thermionic emission approximately 25%. Either direct or alternating current may be used for heating the filament. If direct current is used, the plate and grid circuit returns should be connected to the negative filament terminal. If alternating current is used, the circuit returns should be connected to the center tap of the filament heating transformer winding or the center tap of a 10 to 30 ohm resistor across the filament terminals.

In cases where severe and prolonged overload has temporarily impaired the electronic emission of the filament, the activity may be restored by operating the filament, with the plate and grid voltages off, 30% above normal voltage for 10 minutes followed by a longer period at normal voltage.

Audio Amplifier or Modulator

Class B—Grid bias practically at cut-off and grid driving voltage higher than the bias.

In a Class B audio-frequency power amplifier or modulator two 357A tubes may be used in a balanced circuit. A driving stage capable of about 50 to 75 watts output is required, and an input transformer with good regulation must be used so that the grid current drawn during positive grid swings does not produce appreciable distortion. The output transformer must transform the load impedance to the proper value. The power output obtainable will be determined by the quality of the transformer used and the amount of distortion which can be tolerated. The grid bias must be held constant and therefore cannot be obtained by grid leak or series resistor methods. A battery or other source having good regulation is necessary.

The power required of a modulator for complete modulation of a Class C amplifier is one-half the direct power input to the plates of the Class C amplifier.

Radio-Frequency Oscillator or Power Amplifier

Class B—Radio-Frequency Linear Amplifier

The Class B radio-frequency amplifier is used to amplify a modulated radio-frequency carrier wave without appreciable distortion. It operates similarly to the Class B audio amplifier except that only a single tube need be used, the tuned output circuit serving to preserve the wave shape. The push-pull circuit, however, eliminates the even order harmonics and thus increases the efficiency slightly.

Class C—Radio-Frequency Oscillator or Power Amplifier—Grid Bias Below Cut-off

Unmodulated

This type of operation is suitable for telegraphy, or the production of a continuous flow of radio-frequency power for purposes other than communication.

Plate Modulated

This type of operation is for use when the modulating voltage is superimposed on the plate supply voltage and to obtain good quality the output power should vary as the square of the plate voltage. For complete or 100% modulation, the plate voltage varies from zero to twice the applied direct value during a cycle of the audio frequency. With no modulation applied, the plate voltage is, of course, the direct value and the carrier power output is one-fourth of the peak power output under 100% modulation.

Ultra High Frequency Operation

Because of the design of the 357A tube with very heavy leads and the absence of solid dielectric between electrodes inside the envelope, there is no necessity for reducing the voltage rating of the tube for frequencies up to 100 megacycles. However, because of higher losses in the glass envelope itself it is necessary to insure adequate cooling, so that for operation at frequencies above 40 megacycles it is necessary to provide forced air cooling of the envelope and in addition to provide connectors that will run cool when carrying the high radio-frequency charging currents.

The plate dissipation should be limited to 350 watts and the direct plate current to 0.5 ampere. For frequencies above 100 megacycles it will be found that the efficiency of operation decreases rapidly and it is necessary to reduce the input in order to operate within the 350 watt plate dissipation limit.

This tube will be found to be particularly adapted to efficient operation at frequencies from 50 to 100 megacycles because of its relatively low grid-plate and plate-filament capacities, and because of the relatively short filament leads which allow a maximum of circuit available external to the tube and easy neutralization. Beyond 100 mc. operation, it may be difficult to build a suitable circuit around the 357A tube. For this reason no recommendation is made as to a decrease in plate voltage or input for higher frequencies.

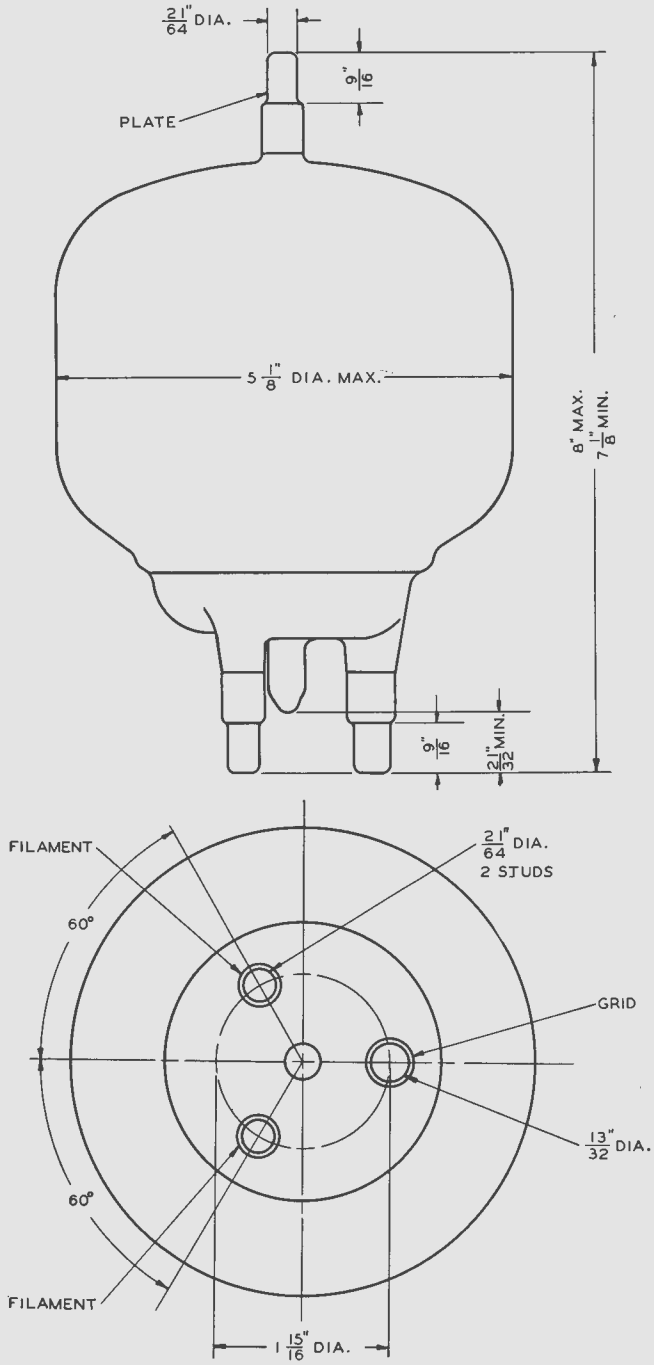

FIG. 1

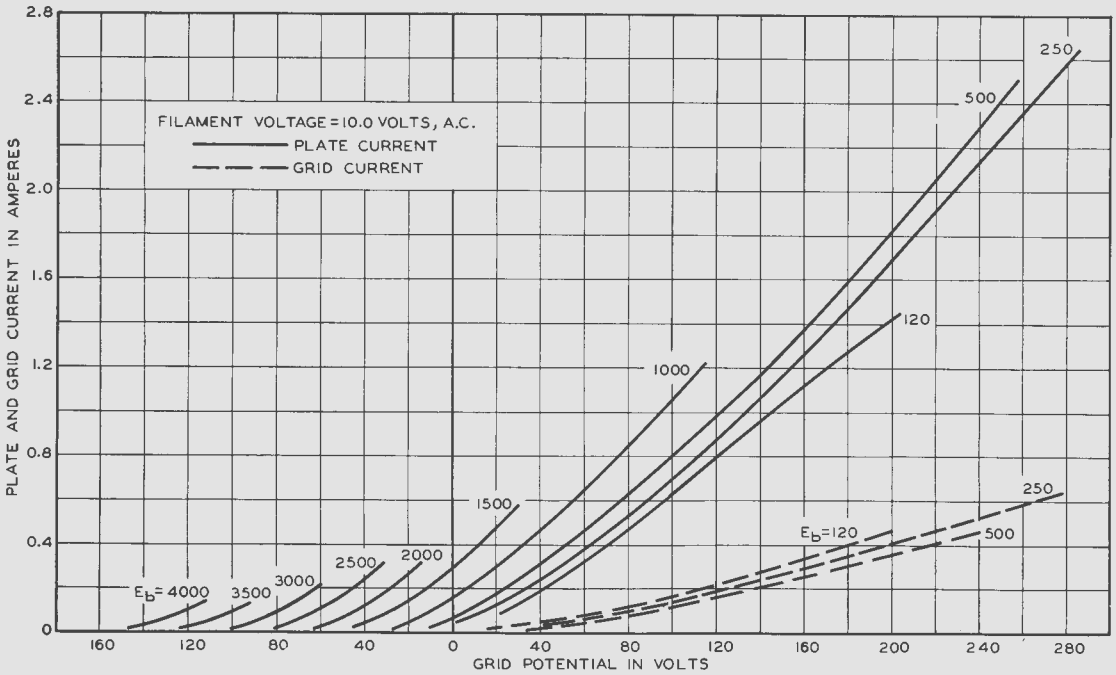
FILAMENT VOLTAGE = 10.0 VOLTS, A.C.
PLATE CURRENT
GRID CURRENT
PLATE AND GRID CURRENT IN AMPERES
GRID POTENTIAL IN VOLTS
2.8
2.4
2.0
1.6
1.2
0.8
0.4
0
160
120
80
40
0
40
80
120
160
200
240
280
250
500
120
1000
1500
2000
2500
3000
3500
E_b = 4000
E_b = 120
250
500

FIG. 2

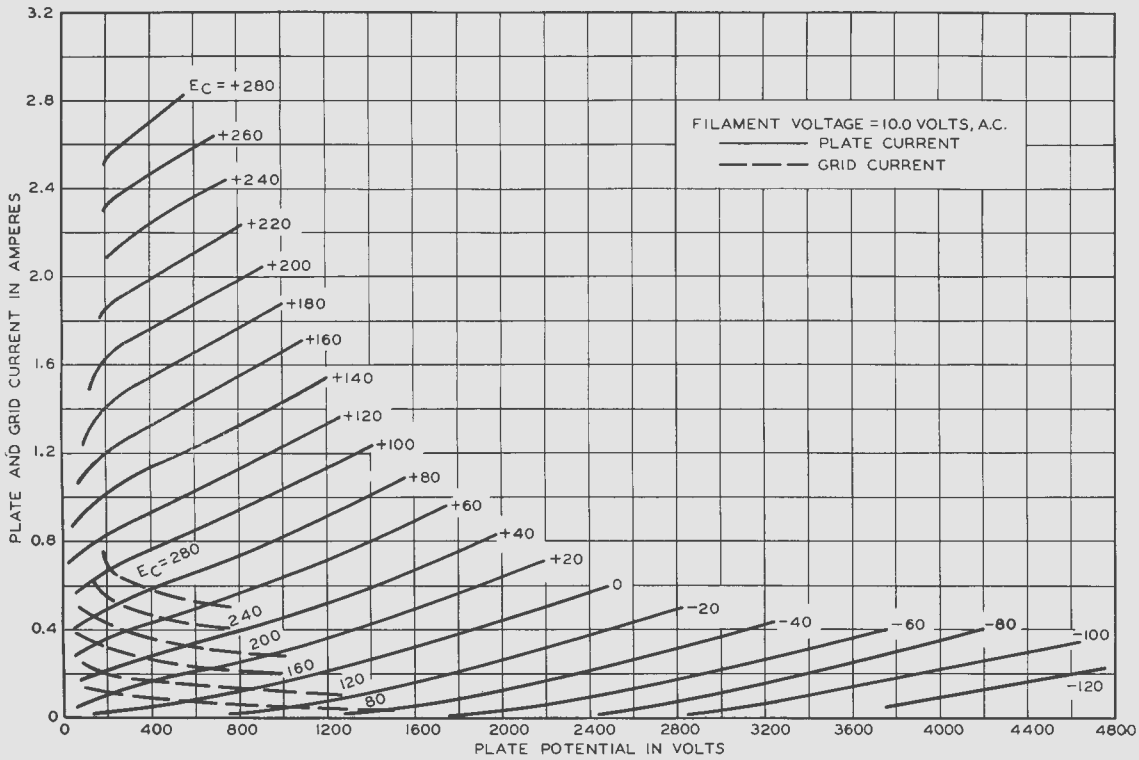
FILAMENT VOLTAGE = 10.0 VOLTS, A.C.
PLATE CURRENT
GRID CURRENT
PLATE AND GRID CURRENT IN AMPERES
PLATE POTENTIAL IN VOLTS
3.2
2.8
2.4
2.0
1.6
1.2
0.8
0.4
0
0
400
800
1200
1600
2000
2400
2800
3200
3600
4000
4400
4800
E_C = +280
+260
+240
+220
+200
+180
+160
+140
+120
+100
+80
+60
+40
+20
0
−20
−40
−60
−80
−100
−120
E_C = 280
240
200
160
120
80

FIG. 3