Western Electric

233B Vacuum Tube

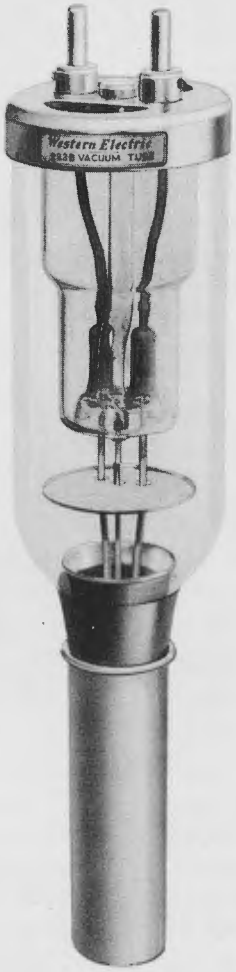

Classification—Half wave, high voltage, water-cooled rectifier

Designed to supply direct current from an alternating current supply. This tube entirely replaces the 233A tube.

Dimensions—Figure 1 shows the dimensions and outline diagrams. The overall dimensions are:

Maximum overall length	20⅞″
Diameter of bulb	4⅛″

Mounting—This vacuum tube should be mounted only in a vertical position with the anode end down in a Western Electric socket made in accordance with ESR-611038, Details 1 and 2 or the equivalent.

Filament—Tungsten

Filament voltage	21.5 volts, a.c.
Nominal filament current	41 amperes
Average thermionic emission	7 amperes

Characteristics and Operating Condition

Maximum peak inverse voltage	50,000 volts
Maximum peak plate current	5 amperes

The maximum permissible peak plate current (5 amperes) is a limitation on the instantaneous value that the tube can carry safely in the direction in which it is designed to conduct and should not be exceeded. The maximum rectified load current is not fixed but will depend upon the wave form required by the load and filter circuit.

The maximum permissible peak inverse voltage (50,000 volts) is a limitation on the instantaneous value that the tube can stand safely in the opposite direction to that in which it is designed to conduct. If it is exceeded, an arc-back may result which will injure the tube. The maximum direct potential available is not fixed but will depend upon the type of circuit used.

233B vacuum tubes may be operated in parallel if some provision is made to insure a proper division of the load current. Resistors in the heating circuit of each filament may be used for this purpose.

Operating Precautions

Mechanical—Figure 1 shows the overall dimensions and basing arrangement for the tube.

The tubes should not be subjected to mechanical shock or excessive vibration. Mechanical vibration may cause breakage of the tungsten filament. Care should always be used in handling the tube to avoid scratches on the glass envelope as these may develop into cracks which result in leaks.

A free circulation of air must be provided to insure adequate cooling of the glass during operation.

The cooling water should be of sufficient purity to retard the tendency to form scale on the anode. Formation of scale would have the effect of insulating the anode from the water and the ineffective cooling of the anode would result in failure of the tube. It is therefore recommended that distilled water be used in the cooling system.

The temperature of the water and rate of flow should be such that there is no tendency for the water to boil, as indicated by a hissing sound, under maximum dissipation. In general, the outlet water temperature should not exceed 75° C. and the rate of flow should be not less than 1 gallon per minute. The minimum length of water column which can be used to insulate the plate from the water supply, which is usually grounded, will depend upon the resistivity of the water used and the leakage current that can be tolerated. This length should not be less than 15 feet. The cooling connections must always be made so that the water flows in at the center port of the tube socket.

The number of water coils required will depend upon the type of circuit in which the tubes are used. For example in Circuit B, although there are four tubes used, only two cooling coils are required since two of the anodes are permanently at ground potential. On the other hand the corresponding filament circuits reach peak alternating potential above ground and must be insulated accordingly.

Provision should be made in the circuit to safeguard against filament and plate voltages being applied until cooling water is circulating at the proper rate and temperatures, and for immediate cut-off of filament and plate voltages if the circulating rate falls below the allowed minimum or the temperature exceeds the allowable maximum. A momentary interruption of the water circulation during operation of the tube may cause immediate failure.

Electrical—Overload protection should always be provided for the plate circuit. Although the tube is sufficiently rugged to withstand momentary overloads, a prolonged overload caused by inefficient adjustment of the circuit, may damage the tube.

Some provision should be made to limit the initial filament current when the filament is cold, to a value of approximately 90 amperes. This may be done by inserting additional resistance or reactance in the filament circuit when voltage is first applied or by using a transformer having sufficiently high reactance.

Figure 2 shows the impedance characteristic and the effect of lowering the filament voltage of a typical tube, and Figure 3 shows the resistance characteristic of the filament.

Typical Rectifier Circuits—This vacuum tube may be used in any conventional rectifier circuit subject to its current and voltage limitations. Typical circuits are shown below. The approximate direct output current and voltage for each type of rectifier circuit where tubes are operated at maximum permissible plate current and inverse voltage are given in the table. The values listed below are average values of the pulsating current and voltage for an unfiltered circuit.

TABLE

Circuit Designation	Number of Tubes	Load Potential in Volts	Load Current in Amperes
A	2	15,000	3
B	4	30,000	3
C	6	45,000	5
D	6	20,000	8.5

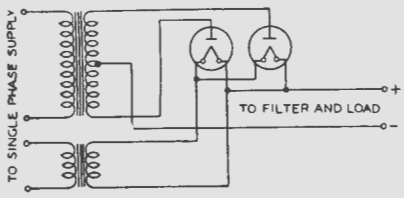

SINGLE PHASE, DOUBLE HALF-WAVE

CIRCUIT A

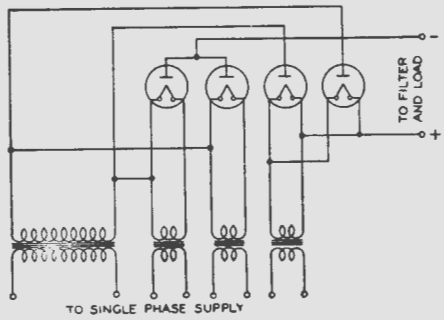

SINGLE PHASE, DOUBLE HALF-WAVE, 4 TUBE SERIES CIRCUIT

CIRCUIT B

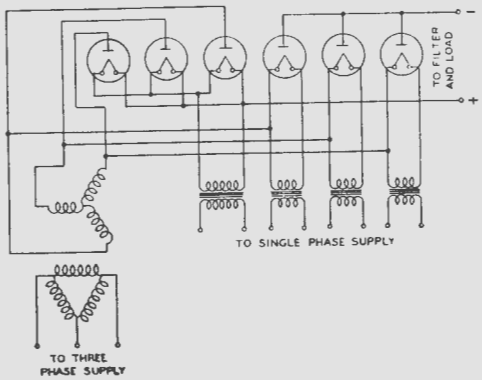

THREE PHASE, 6 TUBE SERIES "Y" CIRCUIT

CIRCUIT C

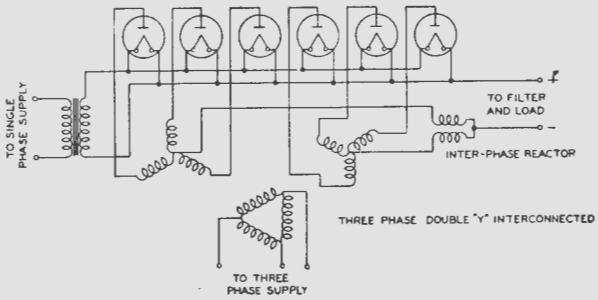

THREE PHASE, "Y" CIRCUIT

CIRCUIT D

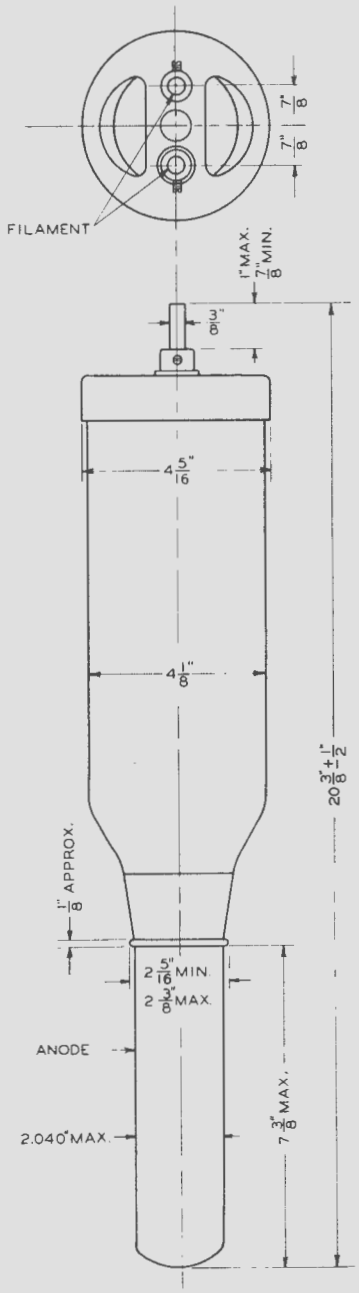

FIG. 1

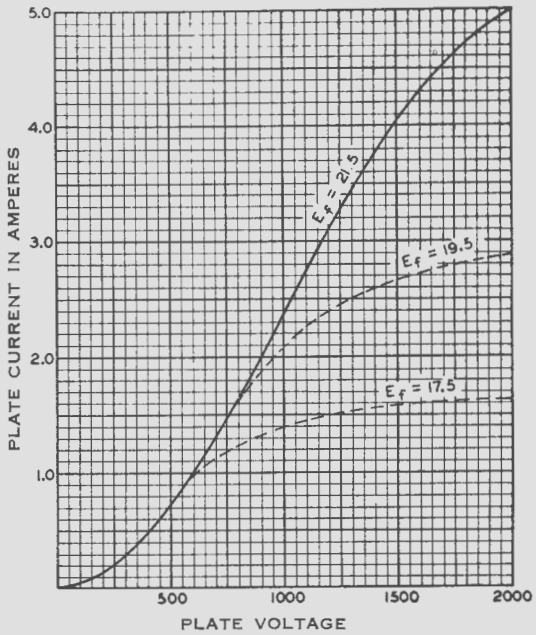

FIG. 2

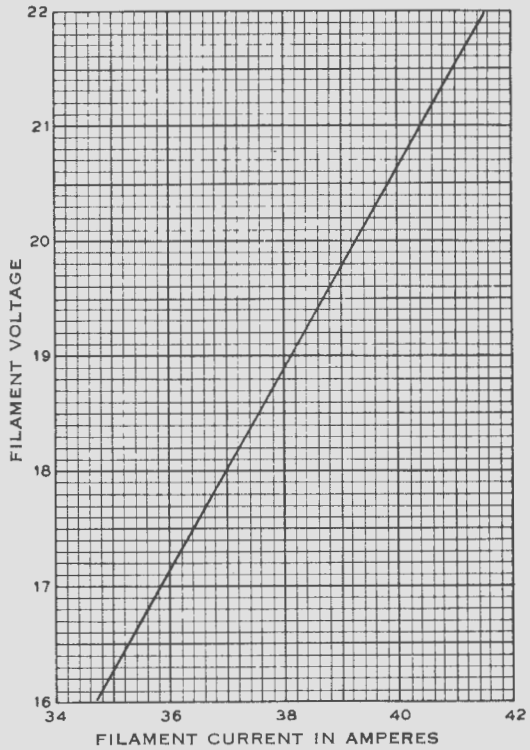

FIG. 3

1-F-41-33-C
PRINTED IN U.S.A.

A development of Bell Telephone Laboratories, Incorporated, the research laboratories of the American Telephone and Telegraph Company, and the Western Electric Company

V. T. DATA SHEET 233B
ISSUE 1