Western Electric

301A Vacuum Tube

Classification—Full wave, thermionic, mercury vapor rectifier

The 301A vacuum tube is designed to supply direct current from an alternating-current supply.

Dimensions—The dimensions and outline diagrams are given in Figures 1 and 2. The overall dimensions are:

Maximum length.....6½"
Maximum diameter.....2 7/16"

Mounting—The 301A employs a standard 4 pin thrust type base suitable for use in a Western Electric 143B or similar socket. Base dimensions and the arrangement of electrode connections to the base terminals are shown in Figs. 1 and 2.

The tube should be mounted in a vertical position with the base end down. There should be a free circulation of air around the tube. No object should touch the glass bulb.

Filament Rating

Filament voltage.....5.0 volts
Nominal filament current.....3.0 amperes

The filament of this tube is designed to operate on a voltage basis from an alternating-current supply. The voltage should be maintained to within 5% of its rated value (5.0 volts). Operation

Copyright 1937 Western Electric Company, Incorporated

of the filament at a voltage above the upper limit will definitely reduce the life of the tube while a decrease in voltage below the lower limit may cause immediate failure.

Sufficient time must always be allowed for the filament temperature to reach its normal operating value before the anode potential is applied. If filament circuits with good regulation are used, this time is 30 seconds. If the tube is operated at ambient temperatures below 20° C., a longer period of time is required for the purpose of bringing the mercury vapor pressure to a satisfactory operating value. The minimum filament warming time as a function of ambient temperature is shown in figure 3.

For proper distribution of the mercury a period of 10 to 15 minutes filament warming time should be allowed when the tube is used for the first time or if it has been reinserted in the apparatus after having been removed.

Characteristics and Operating Conditions

Approximate anode-cathode potential drop	10 volts
Maximum peak plate current	1.0 ampere
Maximum peak potential between electrodes	1800 volts
Maximum operating ambient temperature range	0 to 50° C
Recommended operating ambient temperature range	10 to 40° C

The anode-cathode potential drop is substantially independent of the plate current. The exact value varies from tube to tube and during the life of a given tube. Within the specified ambient temperature range and plate current range, it may vary from 5 to 25 volts.

The anode-cathode drop as a function of temperature is shown on fig. 4 for a typical 301A tube after reaching temperature equilibrium and when passing the rated plate current.

The maximum permissible peak plate current (1.0 ampere) is a limitation on the instantaneous value that the tube can carry safely in the direction in which it is designed to conduct and should not be exceeded. The maximum direct load current is not fixed but will depend upon the wave form required by the load and filter circuit.

The maximum permissible peak potential between electrodes (1800 volts) is a limitation on the instantaneous value that the tube can stand safely. If it is exceeded, an arc-back may result which will injure the tube. The maximum direct potential available is not fixed but will depend upon the type of circuit used.

301A vacuum tubes may be operated in parallel if some provision is made to insure a proper division of the load current. Current dividing reactors or ballasting resistors in series with each anode, may be used for this purpose. The size of the reactors or resistors depends upon the circuit design.

In most cases the termination of the useful life of the 301A tube is due to the loss of filament activity. This causes the tube to fail by arcing between the electrodes. Failures of this kind should be safeguarded by proper fuse protection to prevent injury to other tubes in the circuit and to the auxiliary equipment.

Typical Rectifier Circuits—The 301A vacuum tube may be used in any standard high vacuum rectifier circuit subject to its current, voltage and temperature limitations. Typical circuits are shown below. The approximate direct output current and voltage for each type of rectifier circuit where tubes are operated at maximum permissible plate current and inverse voltage are given in Table 1. The values listed are average values of the pulsating current and voltage for an unfiltered circuit.

Table 1

Circuit Designation	Phase Supply	Number Tubes	Load Potential in Volts	Load Current in Amperes
A	1	1	550	0.6
B	1	2	550	1.2
C	1	2	1100	0.6
D	3	3	800	1.6
E	3	3	700	1.8
F	1	3	1100	0.6

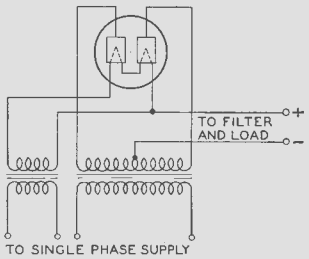

TO SINGLE PHASE SUPPLY
CIRCUIT A
SINGLE PHASE, DOUBLE HALF WAVE

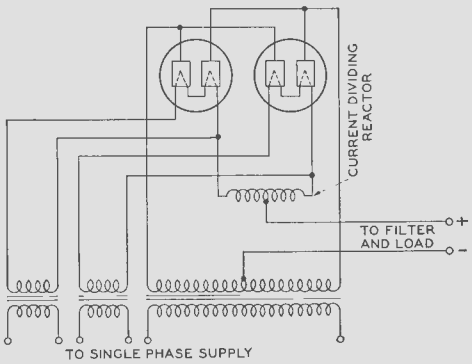

TO SINGLE PHASE SUPPLY
CIRCUIT B
SINGLE PHASE, DOUBLE-HALF-WAVE IN PARALLEL

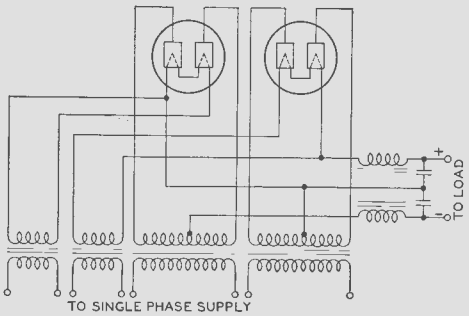

TO SINGLE PHASE SUPPLY
CIRCUIT C
SINGLE PHASE, DOUBLE-HALF-WAVE TWO TUBE
SERIES CIRCUIT

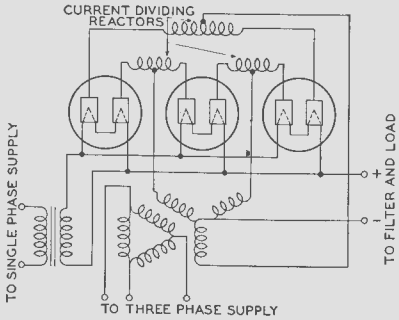

TO THREE PHASE SUPPLY
CIRCUIT D
THREE PHASE "Y" CIRCUIT

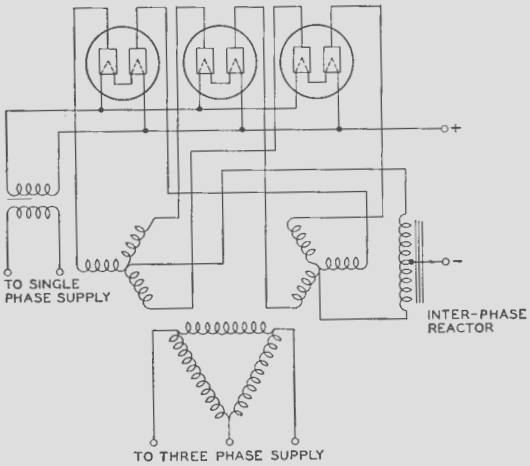

CIRCUIT E
THREE PHASE, DOUBLE "Y" INTERCONNECTED

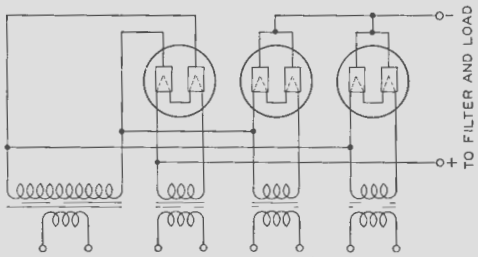

CIRCUIT F
SINGLE PHASE THREE TUBE SERIES CIRCUIT

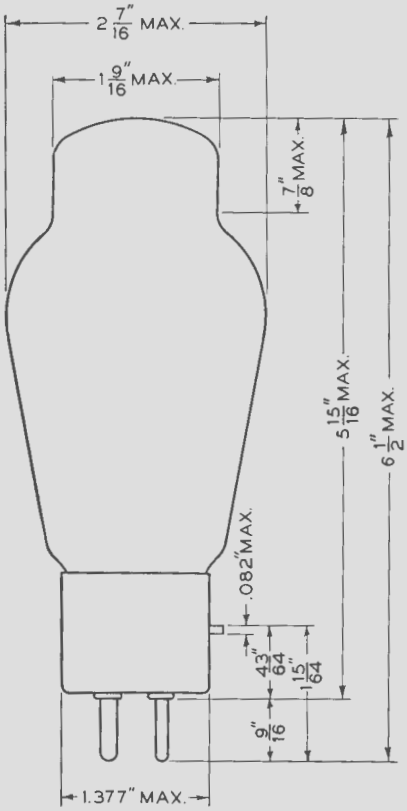

FIG. 1

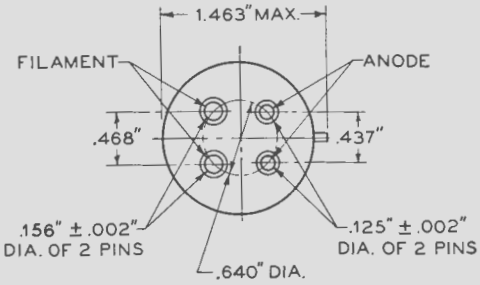

FIG. 2

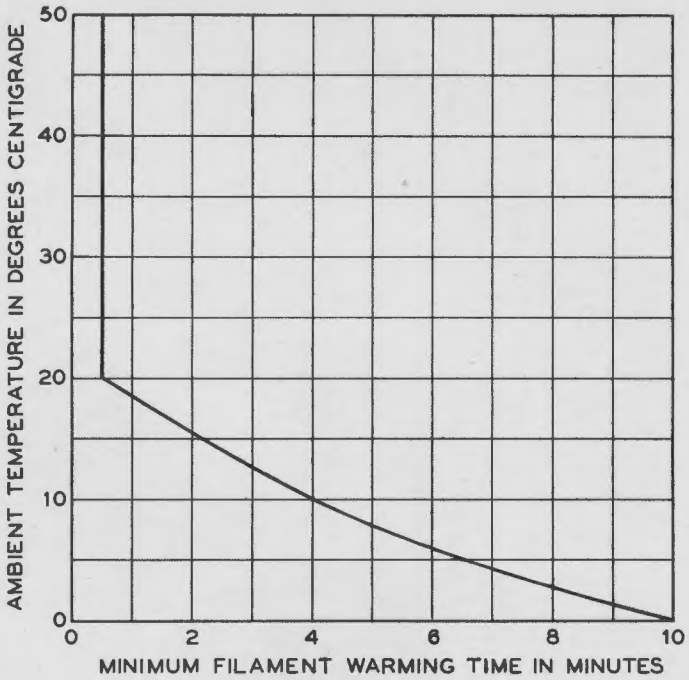

FIG. 3

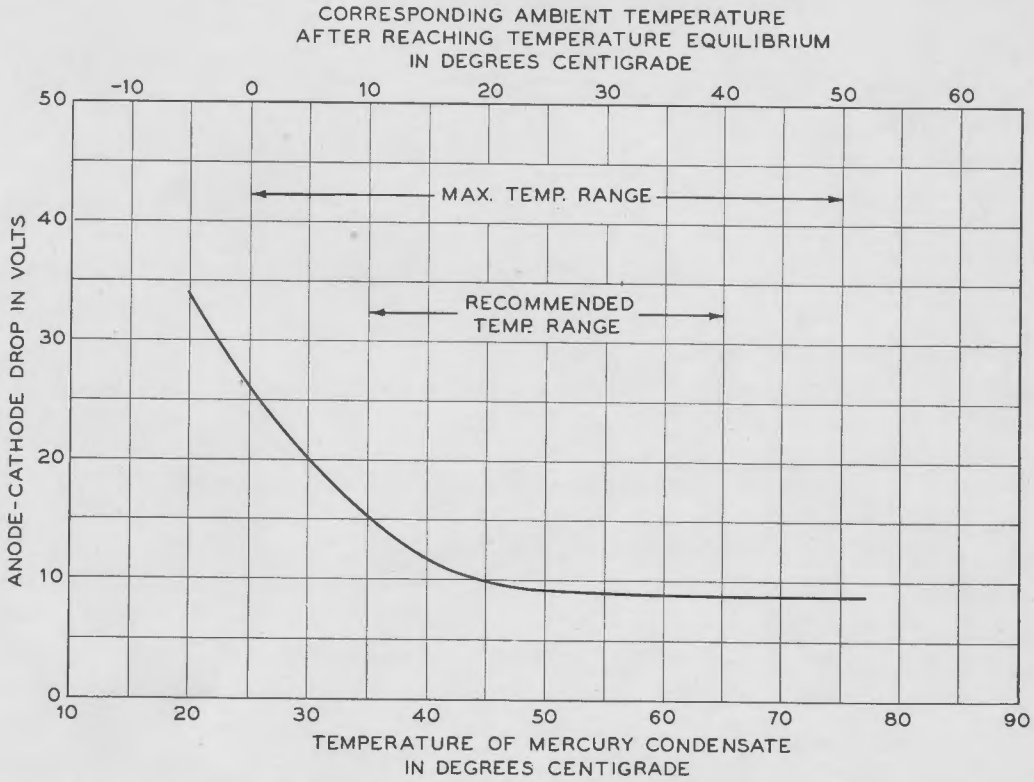

FIG. 4

1-B-37-65C
PRINTED IN U. S. A.

A development of Bell Telephone Laboratories, Incorporated, the research laboratories of the American Telephone and Telegraph Company and the Western Electric Company

V. T. DATA SHEET 301A
ISSUE 1