Western Electric

316A Vacuum Tube

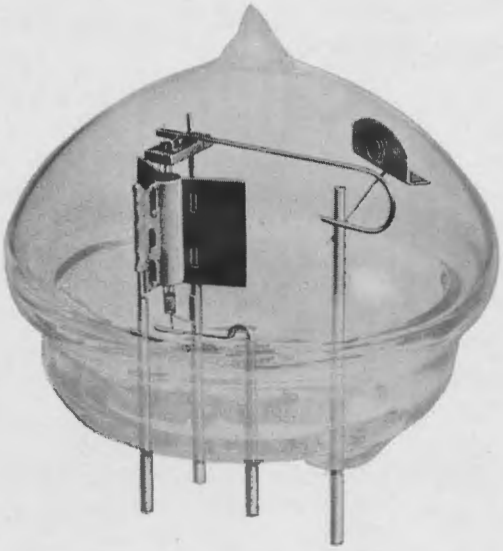

Classification—Filamentary air-cooled triode

Ultra high frequency oscillator and amplifier applications for approximately 7.5 watts peak output. Frequency limit, 750 megacycles.

Dimensions—Dimensions and outline diagrams are shown in Figures 1 and 2. The overall dimensions are:

Maximum overall length	2-25/32″
Maximum diameter	2-11/16″

Mounting—No base is provided for the 316A tube. The grid, plate, and filament leads are tungsten rods projecting from a flat face of the bulb, and the tube may be supported by these leads, providing flexibility is maintained so that no glass strains are produced. It is recommended that small brass or copper sleeves equipped with set screws be used for connectors. Soldering direct to the leads should not be attempted. The tube may be mounted in any position but should be cushioned against vibration to prevent breakage of the filament.

Filament—Thoriated tungsten

Nominal filament voltage	2.0 volts, a.c. or d.c.
Nominal filament current	3.65 amperes
Average thermionic emission	0.4 ampere

Copyright 1936 Western Electric Company, Incorporated

Characteristics—The following performance data are based upon a typical tube. Variations can be expected with different tubes of this type and with different circuits. Figures 4 and 5 give the static characteristics of a typical tube plotted against grid and plate voltages.

Average Characteristics at maximum direct plate voltage and dissipation ($E_b = 450$ volts, $I_b = 67$ milliamperes).

Amplification factor	6.5
Plate resistance	2700 ohms
Grid to plate transconductance	2400 micromhos

Average Direct Interelectrode Capacitances

Plate to grid	1.6 $\mu\mu$f.
Grid to filament	1.2 $\mu\mu$f.
Plate to filament	0.8 $\mu\mu$f.

Operation

Maximum Ratings

Max. direct plate voltage	450 volts
Max. direct plate current	80 milliamperes
Max. direct grid current	12 milliamperes
Max. plate dissipation	30 watts

Maximum plate voltage may be used at any frequency if maximum plate dissipation is not exceeded.

Radio-Frequency Oscillator or Amplifier—Unmodulated

Max. direct plate voltage	450 volts
Max. direct plate current	80 milliamperes
Max. direct grid current	12 milliamperes
Nominal power output at 500 Mc	7.5 watts

Grid bias or leak should be adjusted to optimum value for the particular tube.

Radio-Frequency Oscillator or Amplifier—Plate Modulated

Max. direct plate voltage	400 volts
Max. direct plate current	80 milliamperes
Max. direct grid current	12 milliamperes
Nominal carrier power at 500 Mc	6.5 watts

Grid bias or leak should be adjusted to optimum value for the particular tube.

Operating Precautions

Mechanical—The 316A tube must not be subjected to appreciable mechanical shock or vibration. The thoriated tungsten filament of this tube is somewhat more fragile than the thoriated tungsten filaments of other transmitting tubes. These tubes should therefore be handled with more care to prevent filament breakage. In connecting to the terminals of the tube, care must be taken not to strain the glass. The tube may be supported from the terminals providing flexibility is maintained. Connectors such as brass or copper sleeves with set screws are recommended. It is desirable that the connectors be of sufficient size to assist in cooling the leads. Connections should not be made to the tube terminals by soldering, since cracked seals may result. This type of connection is also unsatisfactory because of the high operating temperature of the leads.

Electrical—Overload protection should always be provided for the plate circuit. A suitable fuse or circuit breaker should remove the plate voltage if the plate current exceeds 125 milliamperes per tube. When adjusting a new circuit, or installing a new tube, a resistance of 1000 to 2000 ohms should be used in the plate supply circuit until it is operating properly.

The filament should be operated at the lowest voltage that will give satisfactory operation. Ordinarily there is an optimum filament voltage associated with the highest output when the tube is used as an oscillator at ultra-high frequencies. This optimum filament voltage will increase very slowly with life. Either direct or alternating current may be used for heating the filament. If direct current is used, the plate and grid circuit returns should be connected to the negative filament terminal. If alternating current is used, the circuit returns should be connected to the center tap of the filament heating transformer winding or the center tap of a resistor placed between the filament terminals. A resistance of about 10 ohms of 1 watt rating is suitable.

Ultra High Frequency Operation

When the 316A tube is used at frequencies above 300 megacycles, several precautions must be observed in the circuit design in order to obtain good efficiency. It is necessary to provide tuning in the filament to ground circuit. The use of adjustable concentric lines of approximately ¼ wave length for each filament lead is probably the most satisfactory method. It is also desirable to avoid the use of dielectric material as much as possible and to confine that which is necessary for mounting circuit elements to points of low r-f voltage. The grid and plate supply leads should be connected at nodal points if possible. Figure 3 shows a schematic of an oscillator circuit which will function at frequencies as high as 600 megacycles. For operation at 500 megacycles, the area enclosed by the circuit, A, should be about 1½ square inches outside of the tube envelope and the capacity about 1.75 mmf. It is important that a reference ground such as a sheet of copper underneath the circuit, or a copper box enclosing the circuit be used and that by-passes be made directly to this ground with as short leads as possible.

When the circuit is operated initially, the following procedure should be observed.

Place a 1000 ohm resistor in series with the plate supply source. Apply 2.0 volts to the filament and with the grid leak set at 15,000 ohms apply plate voltage and adjust the filament tuning for greatest amplitude of oscillation as evidenced by the highest grid current. However the grid current should not be allowed to exceed 12 milliamperes. Measure the wavelength and adjust the tuning condenser, correcting the filament tuning at the same time, until the circuit oscillates at the desired wavelength. Couple the load inductively, remove the 1000 ohm resistor from the plate supply, and adjust the filament tuning and grid leak for best output at rated input of 80 milliamperes. The load coupling and filament tuning will both be found fairly critical for best efficiency.

The following table indicates the nominal output obtainable from a 316A tube as an unmodulated oscillator with an input of 400 volts and 80 milliamperes d.c.

Frequency—Mc.	Power Output—Watts
300	8.5
400	8.0
500	6.5
600	4.0
750	Limit of oscillation

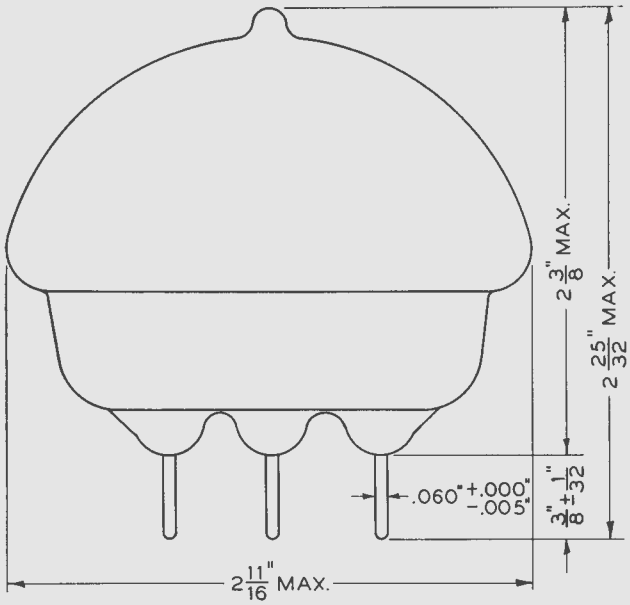
2 3/8" MAX.
2 25/32" MAX.
.060" +.000" -.005"
3/8" ± 1/32"
2 11/16" MAX.

FIG. 1

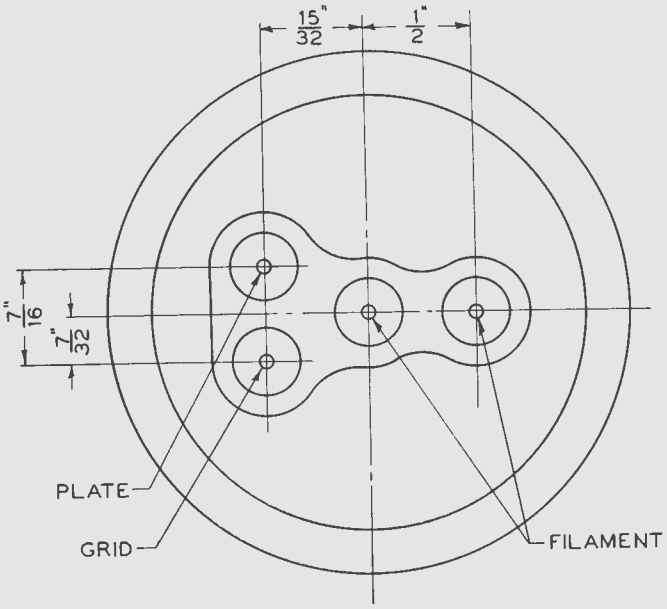
15/32"
1/2"
7/16"
7/32"
PLATE
GRID
FILAMENT

FIG. 2

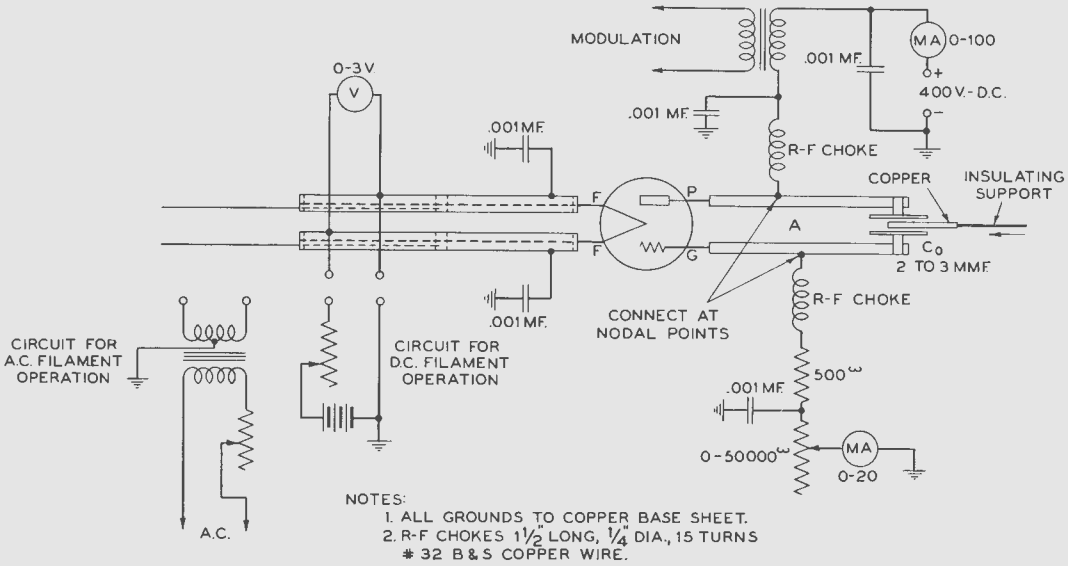

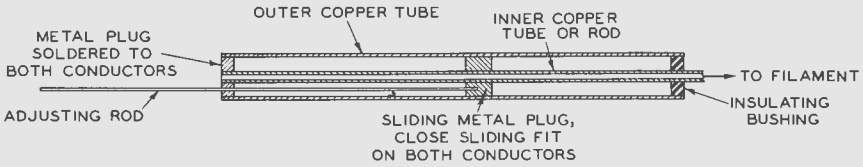

NOTE:
RATIO OF CONDUCTOR DIAMETERS BETWEEN 2 AND 4. LENGTH, 3/8 WAVELENGTH.

DETAIL OF FILAMENT TUNING RODS

FIG. 3

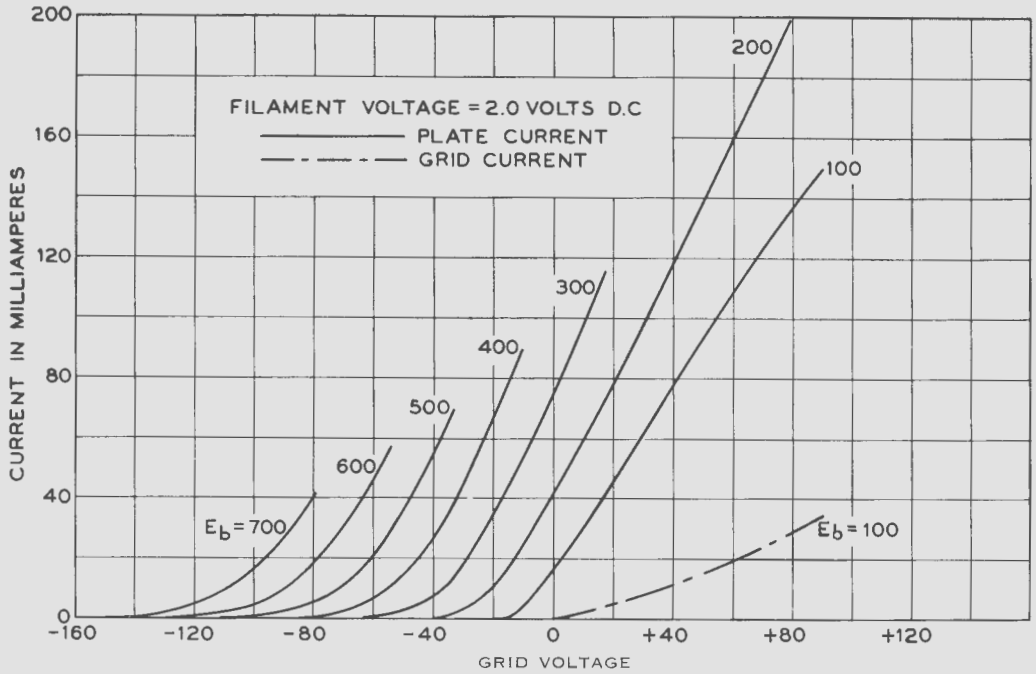

FIG. 4

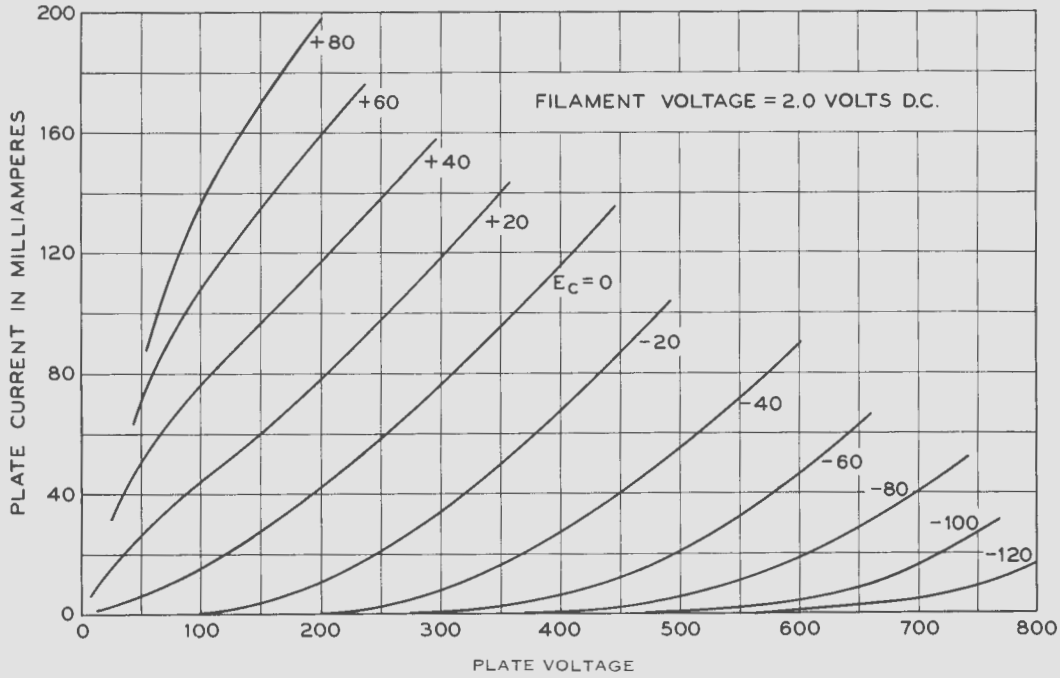

FIG. 5

1-G-36-6M
PRINTED IN U.S.A.

A development of Bell Telephone Laboratories, Incorporated, the research laboratories of the American Telephone and Telegraph Company and the Western Electric Company

V. T. DATA SHEET 316A
ISSUE 1